Common Mode Power Line Choke - CMH2220 Series MEISONGBEI

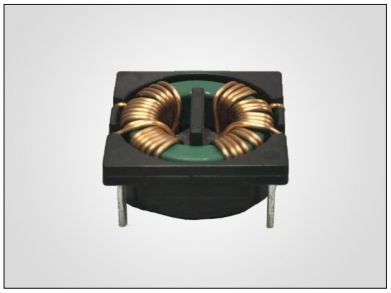

Features

- Horizontal structure
- Flammability corresponding to UL94V-0
- Custom designs are available

Applications

- Power electronics
- Power line in and output filter
- Suppression of common mode noise

General Specifications

- Storage temp range: -40°C to +105°C
- Operating temp range: -40°C to +105°C
- Moisture Sensitivity Level(MSL): 1

RoHS COMPLIANT | REACH COMPLIANT | Halogen Free

Dimensions & Configurations (Unit:mm)

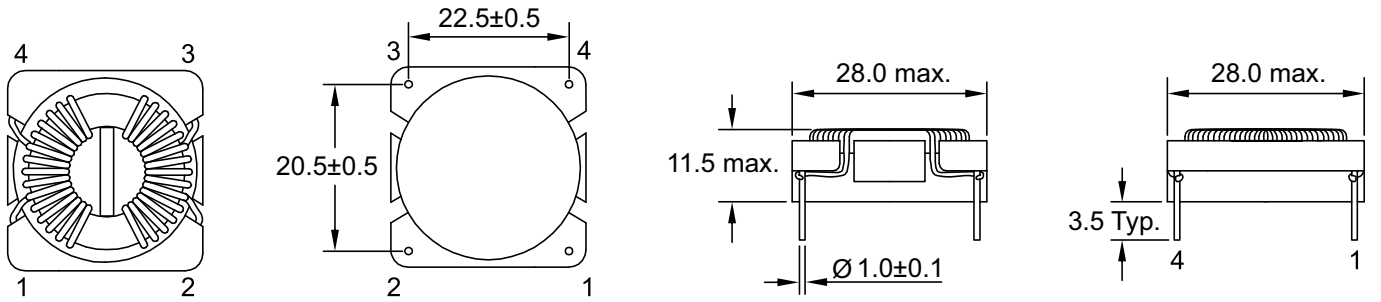

Schematic

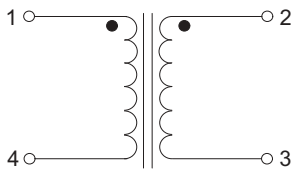

Turns Ratio: 1:1

Electrical Specifications @ 25°C

Part Number	Inductance [mH] (min.)	Rated Current [A]	DCR(max) [mΩ]
CMH2220-681U-5.0A	0.68	5.0	15
CMH2220-122U-4.5A	1.2	4.5	30
CMH2220-182U-3.5A	1.8	3.5	30
CMH2220-682U-2.5A	6.8	2.5	80
CMH2220-103U-2.0A	10	2.0	150
CMH2220-123U-1.8A	12	1.8	200
CMH2220-223U-1.5A	22	1.5	250

- Inductance is per winding tested at 10kHz,0.1V
- Hi-pot:AC1500V/5mA/2S (N1-N2)
- Rated Voltage: 250VAC max