SMD Common Mode Choke - CTX2211

MEISONGBEI



Features

- Current rating up to 7A
- Compact size
- Tape Package:200PCS/Reel

General Specifications

- Temperature Rise 35°C typical at Irms
- Operating temp range: -40°C to +125°C
- Storage temp range: -40°C to +125°C

Applications

- Filtering
- Common mode

RoHS COMPLIANT | REACH COMPLIANT | Halogen Free

Dimensions & Configurations (Unit:mm)

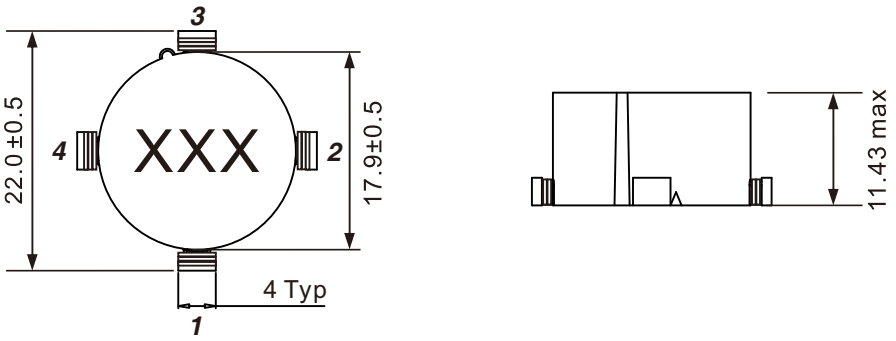

Land Patterns(mm)

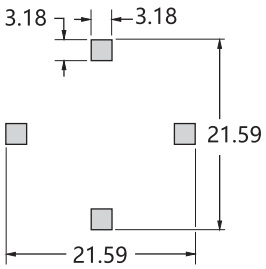

Schematic

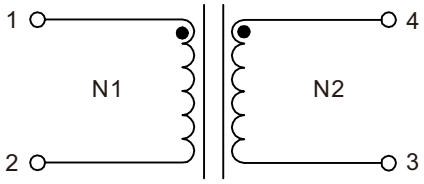

Turns Ratio: N1:N2 = 1:1

Electrical Characteristics @ 25°C

Part Number	Inductance @ 1 KHz (mH) Min.	Marking	DCR (Ω) Max.	Irms (A)	Leakage Inductance (uH) Typ.	Typical Frequency Range with 20 dB Atten.
CTX2211-201Y	0.2	201	0.008	7.0	1.6	5 - 55 MHz
CTX2211-501Y	0.5	501	0.010	6.0	2.2	4 - 40 MHz
CTX2211-751Y	0.75	751	0.012	5.5	2.9	1 - 20 MHz
CTX2211-102Y	1.0	102	0.020	4.0	3.9	500 KHz - 40 MHz
CTX2211-202Y	2.0	202	0.030	3.5	0.3	300 KHz - 20 MHz
CTX2211-502Y	5.0	502	0.070	2.0	0.4	100 KHz - 10 MHz
CTX2211-103Y	10	103	0.150	1.5	0.5	50 KHz - 5 MHz
CTX2211-203Y	20	203	0.250	1.0	0.7	25 KHz - 4 MHz