10VA EI 48-16.8 EI4816 Series

50/60Hz PCB Mount Transformers

Meisongbei

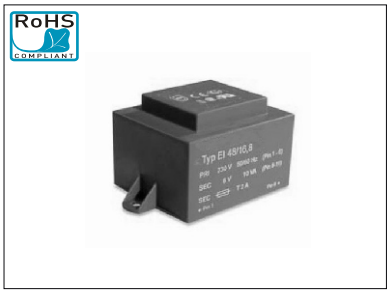

Features

- Vacuum filling
- Two compartments bobbins
- Self-extingFAUIshing plastics UL 94 VO
- Degree of protection IP 00
- 300 grams weight

Applications

- Medical equipments
- Industrial equipments
- Industrial controls
- Test equipments
- Industrial computers
- Avionics & telecom

Physical Characteristics (Unit: mm)

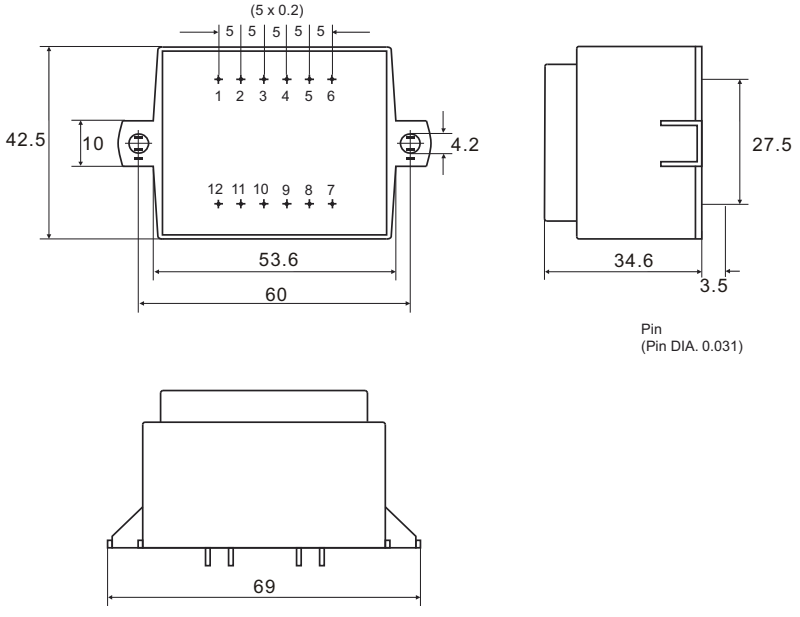

Schematics

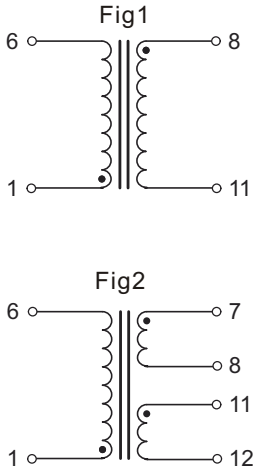

Electrical Characteristics

Primary Voltage: 230V						
Part Number	Secondary voltage (V)	Secondary Current (mA)	No-load voltage (V)	Fig	Ambient Temperature (°C)	Rating VA
EI481601	6	1666	7.9	1	T40B	10
EI481602	9	1111	12	1	T40B	10
EI481603	12	834	15.7	1	T40B	10
EI481604	15	666	19.2	1	T40B	10
EI481605	18	555	22.9	1	T40B	10
EI481606	24	416	30.6	1	T40B	10
EI481607	2 x 6	2 x 834	2 x 7.9	2	T40B	10
EI481608	2 x 9	2 x 555	2 x 12.0	2	T40B	10
EI481609	2 x 12	2 x 416	2 x 15.7	2	T40B	10
EI481610	2 x 15	2 x 333	2 x 19.2	2	T40B	10