

Features

- Primary / Secondary Insulation ≥ 4000V
- Primary / Auxiliary Insulation ≥ 1500V

Applications

- AC-DC converters
- DC-DC converters
- Switch Power supplies
- SMPS: Flyback
- SMPS: Half Bridge and Full Bridge

Physical Characteristics (Unit:mm)

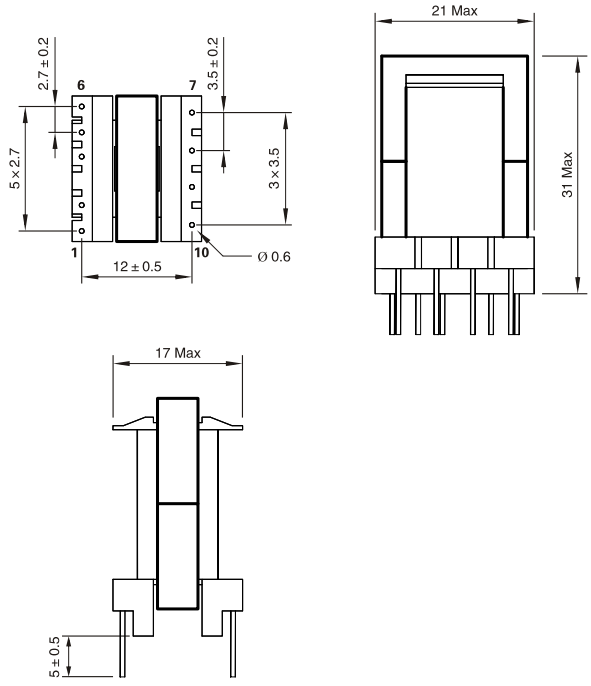

Schematic

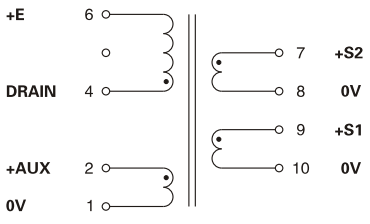

Pin 3 Removed
PCB Hole Diameter=1.1mm

Electrical Characteristics

Part Number		Output Power max	Windings						Ambient Temperature
				Pins	Turns	Voltage	Current (max)	Inductance (±10%)	
EL1901	74020	18W	Pri	4-6	108	65 - 130 (VOR)	0.8 Apeak	1250 uH	<50°C
			Aux	2-1	12	7 - 12 Vdc	0.1 Adc		
			S1	9-10	6	3.3 - 7 Vdc	3 Adc		
			S2	7-8	14	8 - 16.5 Vdc	1.4 Adc		
EL1902	74021	18W	Pri	4-6	108	65 - 130 (VOR)	1.1 Apeak	900 uH	<50°C
			Aux	2-1	12	7 - 12 Vdc	0.1 Adc		
			S1	9-10	6	3.3 - 7 Vdc	3 Adc		
			S2	7-8	14	8 - 16.5 Vdc	1.4 Adc		