

Features

- Primary / Secondary Insulation ≥ 4000V
- Primary / Auxiliary Insulation ≥ 1500V

Applications

- AC-DC converters
- DC-DC converters
- Switch Power supplies
- SMPS: Flyback
- SMPS: Half Bridge and Full Bridge

Physical Characteristics (Unit:mm)

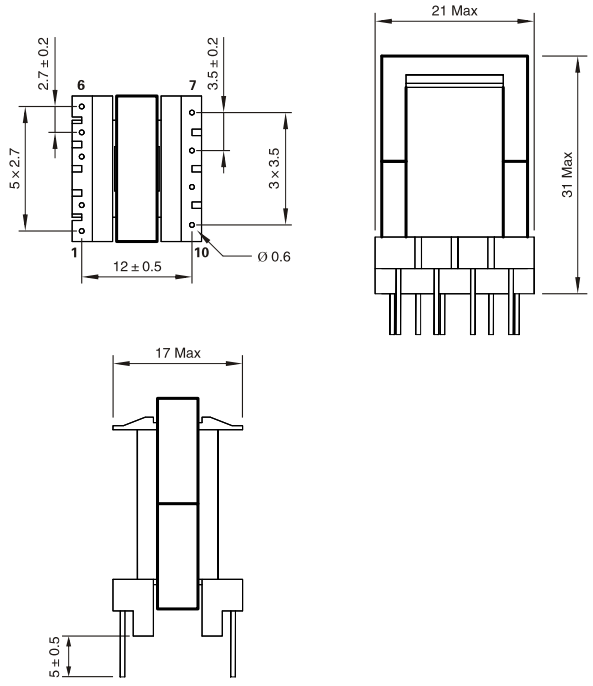

Schematic

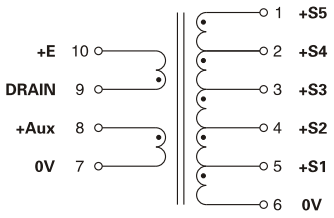

PCB Hole Diameter=1.1mm

Electrical Characteristics

Part Number		Output Power max	Windings						Ambient Temperature
				Pins	Turns	Voltage	Current (max)	Inductance (±10%)	
EL1903	74023	16W	Pri	9-10	120	110 (VOR)	0.85 Apeak	1250 uH	<50°C
			Aux	8-7	17	15 Vdc	0.2 Adc		
			S1	5-6	4	3.3 Vdc	2 Adc		
			S2	4-6	6	5 Vdc	Sum S1+S2		
			S3	3-6	14	12 Vdc	0.8 Adc		
			S4	2-6	20	18 Vdc	0.8 Adc		
			S5	1-6	33	30 Vdc	0.2 Adc		