EMI Suppression Ferrite Beads - FB2-3590-2

Meisongbei

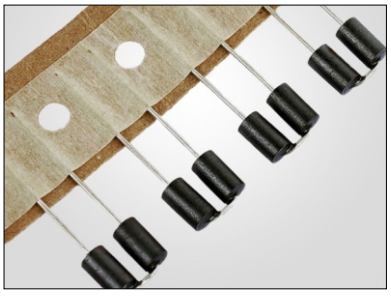

Features

- Substantial EMI suppression over a wide frequency range.
- High reliability.

General Specifications

- Storage temp range: -25°C to +85°C
- Operating temp range: -25°C to +125°C
- Moisture Sensitivity Level(MSL): 1

Applications

- Power supply systems
- Consumer electronics
- Industrial electronics

RoHS COMPLIANT | REACH COMPLIANT | Halogen Free

Dimensions & Electrical Characteristics

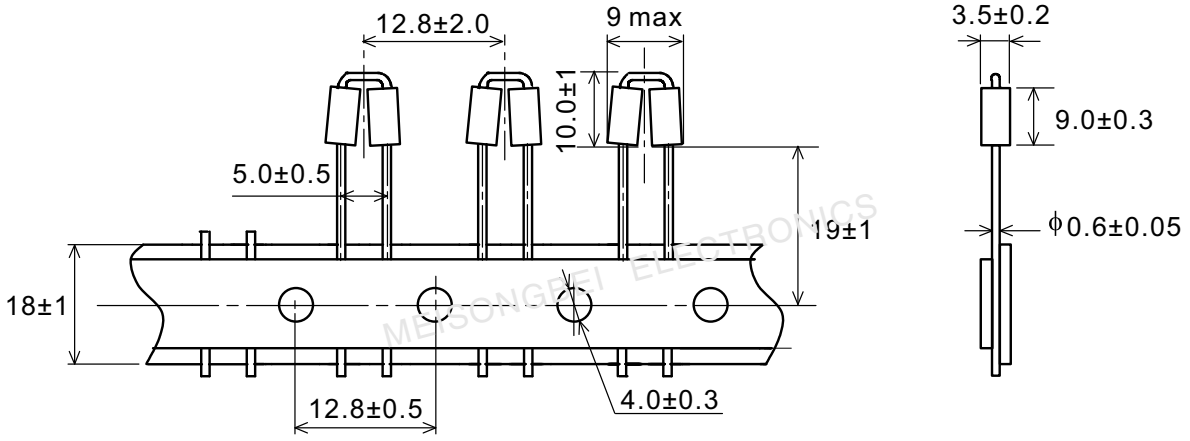

Electrical Specifications @ 25°C

Part Number	Impedance @ 25MHz	Impedance @ 100MHz	Rated Current
FB2-3590-2	100Ω min.	160Ω min.	6A

- Testing: Impedance is tested on an HP-4286A at 25MHz & 100MHz
- Rated Current: 40°C Rise