SMD High Current Power Inductor - HI0412 Series

Meisongbei



Features

- Shielded Construction
- Core Material: Metal alloy powder
- Low core loss
- Ultra low buzz noise
- RoHS Compliant and Halogen Free

General Specifications

- Storage temp range: -55°C to +125°C
- Operating temp range: -55°C to +125°C
- Moisture Sensitivity Level(MSL): 1

RoHS COMPLIANT | REACH COMPLIANT | Halogen Free

Shape and Dimensions (Unit:mm)

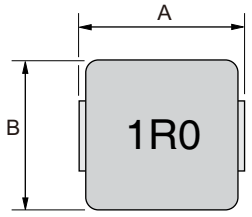

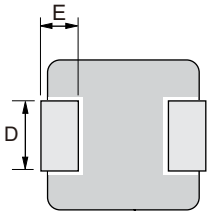

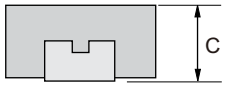

Recommended Layout

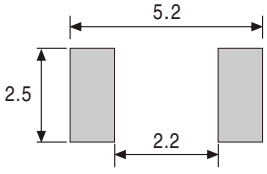

Type	A	B	C	D	E
HI0412	4.4±0.35	4.2±0.25	1.0±0.2	2.0±0.3	0.8±0.3

Electrical Characteristics For HI0412 Series @ 25°C

Part Number	Inductance (μH) ±20%	DCR (mΩ) Max.	Isat (A) Typ.	Irms (A) Typ.
HI0412-R15M	0.15	9	15	7.5
HI0412-R22M	0.22	11	11	7
HI0412-R33M	0.33	19	8.4	6.5
HI0412-R47M	0.47	21	6.8	6
HI0412-R68M	0.68	36	6	4.7
HI0412-1R0M	1.0	47	5.5	4.5
HI0412-1R5M	1.5	75	4	3.25
HI0412-2R2M	2.2	83.5	3	2.75
HI0412-4R7M	4.7	195	2.2	1.8

- Inductance tested at 100kHz, 1.0Vrms, 0.0Adc
- Heat Rating Current (Irms): Current that cause the temperature 40°C rise from 25°C
- Saturation Current (Isat): DC current at which the inductance drops 30% from its value without current

Tape & Reel Specifications:

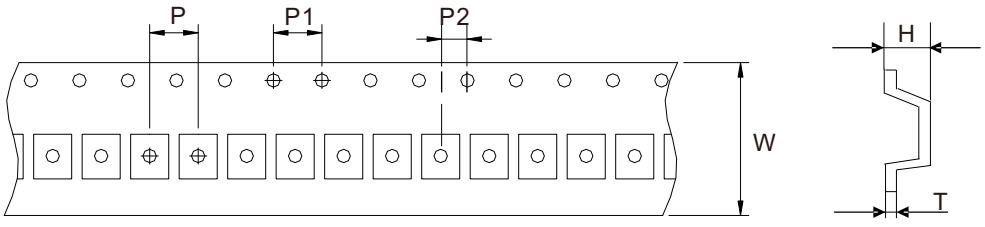

Unit: mm

Type	Dimension	W	P	P1	P2	H	T
	Tolerance	±0.3	±0.1	±0.1	±0.1	±0.15	±0.05
HI0412		12.0	8.0	4.0	2.0	1.50	0.35

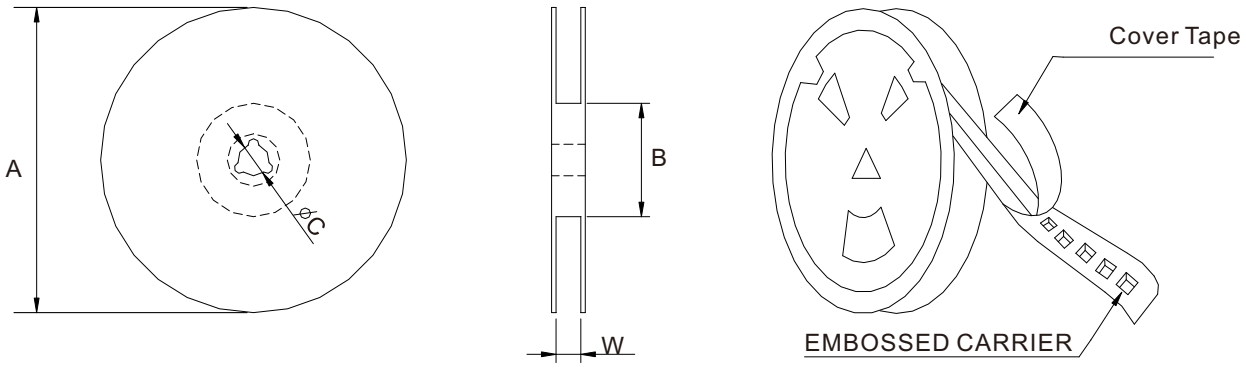

Unit: mm

Type	Dimension	QTY Per Reel	A	B	C	W
	Tolerance	PCS	±2.0	±0.5	±0.5	±0.5
HI0412		3000	330	97	13	12.8