SMD High Current Power Inductor - HI0420 Series

Meisongbei



Features

- Shielded Construction
- Core Material: Metal alloy powder
- Low core loss
- Ultra low buzz noise
- RoHS Compliant and Halogen Free

General Specifications

- Storage temp range: -55°C to +125°C
- Operating temp range: -55°C to +125°C
- Moisture Sensitivity Level(MSL): 1

RoHS COMPLIANT | REACH COMPLIANT | Halogen Free

Shape and Dimensions (Unit:mm)

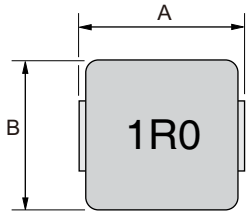

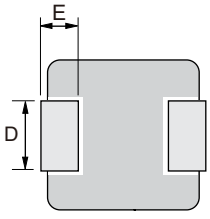

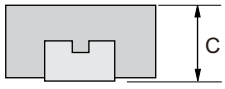

Recommended Layout

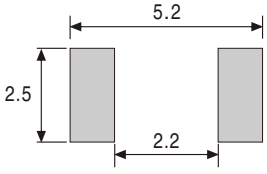

Type	A	B	C	D	E
HI0420	4.4±0.35	4.2±0.25	1.8±0.2	2.0±0.3	0.8±0.3

Electrical Characteristics For HI0420 Series @ 25°C

Part Number	Inductance (μH) ±20%	DCR (mΩ) Max.	Isat (A) Typ.	Irms (A) Typ.
HI0420-R10M	0.10	4	22	13
HI0420-R22M	0.22	6.6	12.5	9.5
HI0420-R33M	0.33	11	12	10
HI0420-R47M	0.47	14	9.5	7.5
HI0420-R56M	0.56	16	9	7
HI0420-R68M	0.68	18	8	7
HI0420-1R0M	1.0	27	7	6
HI0420-1R2M	1.2	27	6.5	6
HI0420-1R5M	1.5	46	5.5	5
HI0420-2R2M	2.2	58	5	4.5
HI0420-3R3M	3.3	87	3.5	3.3
HI0420-4R7M	4.7	105	3	2.8
HI0420-6R8M	6.8	175	2.5	2.4
HI0420-100M	10	282	2	1.6

- Inductance tested at 100kHz, 1.0Vrms, 0.0Adc
- Heat Rating Current (Irms): Current that cause the temperature 40°C rise from 25°C
- Saturation Current (Isat): DC current at which the inductance drops 30% from its value without current

Tape & Reel Specifications:

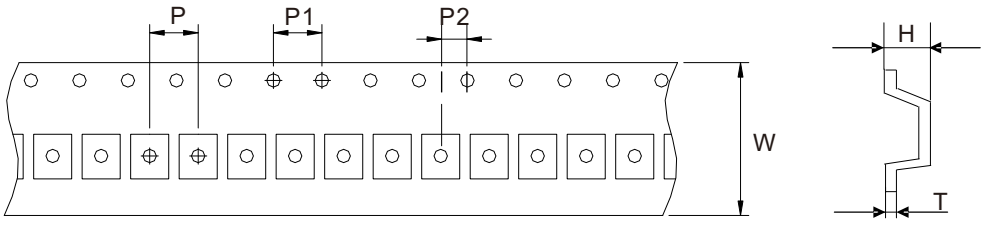

Unit: mm

Type	Dimension	W	P	P1	P2	H	T
	Tolerance	±0.3	±0.1	±0.1	±0.1	±0.15	±0.05
HI0420		12.0	8.0	4.0	2.0	2.30	0.35

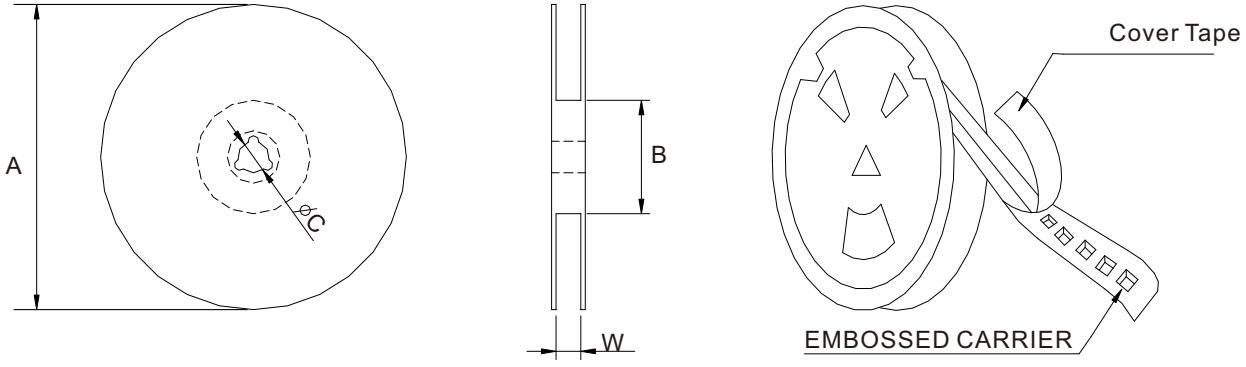

Unit: mm

Type	Dimension	QTY Per Reel	A	B	C	W
	Tolerance	PCS	±2.0	±0.5	±0.5	±0.5
HI0420		3000	330	97	13	12.8