SMD High Current Power Inductor - HI0518 Series

Meisongbei



Features

- Shielded Construction
- Core Material: Metal alloy powder
- Low core loss
- Ultra low buzz noise
- RoHS Compliant and Halogen Free

General Specifications

- Storage temp range: -55°C to +125°C
- Operating temp range: -55°C to +125°C
- Moisture Sensitivity Level(MSL): 1

RoHS COMPLIANT | REACH COMPLIANT | Halogen Free

Shape and Dimensions (Unit:mm)

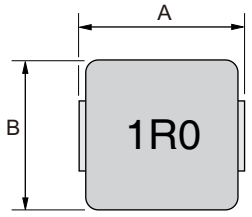

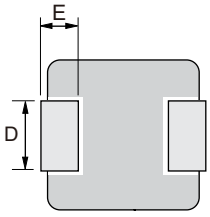

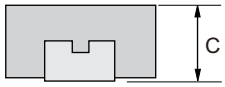

Recommended Layout

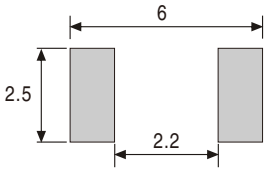

Type	A	B	C	D	E
HI0518	5.4±0.35	5.2±0.2	1.6±0.2	2.2±0.3	1.2±0.2

Electrical Characteristics For HI0518 Series @ 25°C

Part Number	Inductance (μH) ±20%	DCR (mΩ) Max.	Isat (A) Typ.	Irms (A) Typ.
HI0518-R47M	0.47	9	15.5	10.5
HI0518-R56M	0.56	10	15	9.5
HI0518-R68M	0.68	13.8	11.2	8.9
HI0518-1R0M	1.0	17	9	8
HI0518-1R5M	1.5	26	8	7.5
HI0518-2R2M	2.2	35	6.5	5
HI0518-3R3M	3.3	58	5	4.5
HI0518-4R7M	4.7	85	4	3.5
HI0518-6R8M	6.8	120	3.4	2.8
HI0518-100M	10	155	3	2.5

- Inductance tested at 100kHz, 1.0Vrms, 0.0Adc
- Heat Rating Current (Irms): Current that cause the temperature 40°C rise from 25°C
- Saturation Current (Isat): DC current at which the inductance drops 30% from its value without current

Tape & Reel Specifications:

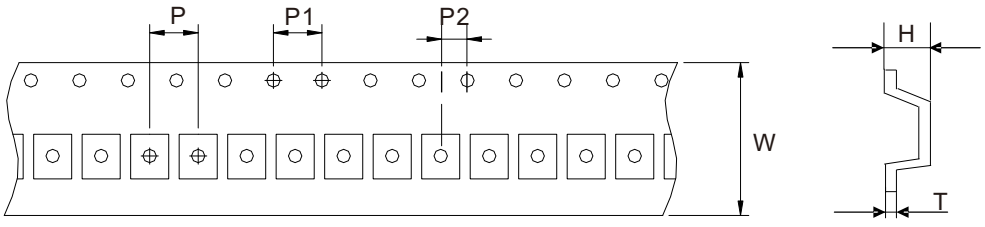

Unit: mm

Type	Dimension	W	P	P1	P2	H	T
	Tolerance	±0.3	±0.1	±0.1	±0.1	±0.15	±0.05
HI0518		12.0	8.0	4.0	2.0	2.00	0.35

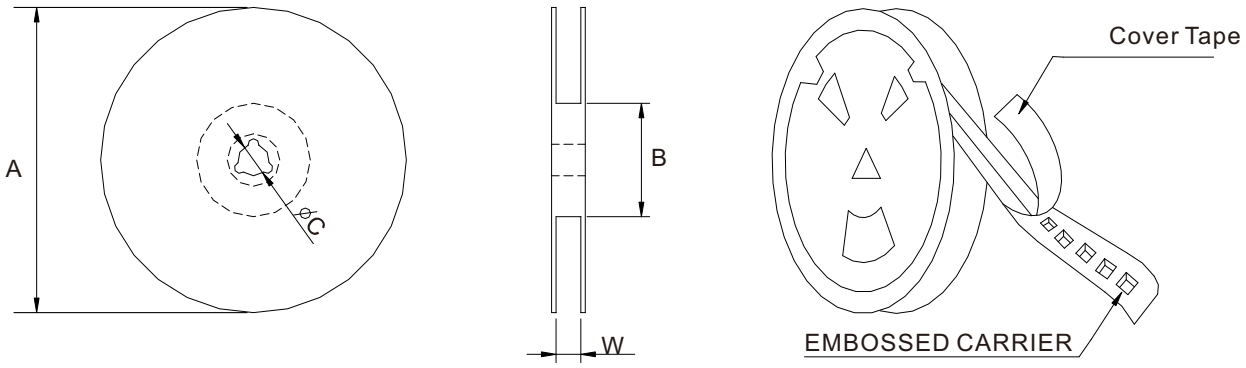

Unit: mm

Type	Dimension	QTY Per Reel	A	B	C	W
	Tolerance	Pcs	±2.0	±0.5	±0.5	±0.5
HI0518		2000	330	97	13.2	12.8