SMD High Current Power Inductor - HI0520 Series

Meisongbei



Features

- Shielded Construction
- Core Material: Metal alloy powder
- Low core loss
- Ultra low buzz noise
- RoHS Compliant and Halogen Free

General Specifications

- Storage temp range: -55°C to +125°C
- Operating temp range: -55°C to +125°C
- Moisture Sensitivity Level(MSL): 1

RoHS COMPLIANT | REACH COMPLIANT | Halogen Free

Shape and Dimensions (Unit:mm)

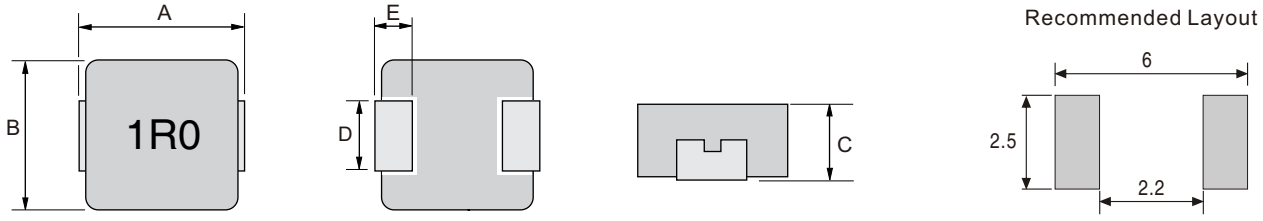

Type	A	B	C	D	E
HI0520	5.4±0.35	5.2±0.2	1.8±0.2	2.2±0.3	1.2±0.2

Electrical Characteristics For HI0520 Series @ 25°C

Part Number	Inductance (μH) ±20%	DCR (mΩ) Max.	Isat (A) Typ.	Irms (A) Typ.
HI0520-R22M	0.22	4.5	19	15
HI0520-R47M	0.47	9	16	10.5
HI0520-R56M	0.56	10	15	9.5
HI0520-1R0M	1.0	17	9.5	8
HI0520-1R5M	1.5	30	8.5	5.5
HI0520-2R2M	2.2	34	7	5
HI0520-3R3M	3.3	58	5.5	4.5
HI0520-4R7M	4.7	78	4.5	3.5
HI0520-6R8M	6.8	120	3.5	2.8
HI0520-8R2M	8.2	150	3.3	2.6
HI0520-100M	10	175	3	2.5

- Inductance tested at 100kHz, 1.0Vrms, 0.0Adc
- Heat Rating Current (Irms): Current that cause the temperature 40°C rise from 25°C
- Saturation Current (Isat): DC current at which the inductance drops 30% from its value without current

Tape & Reel Specifications:

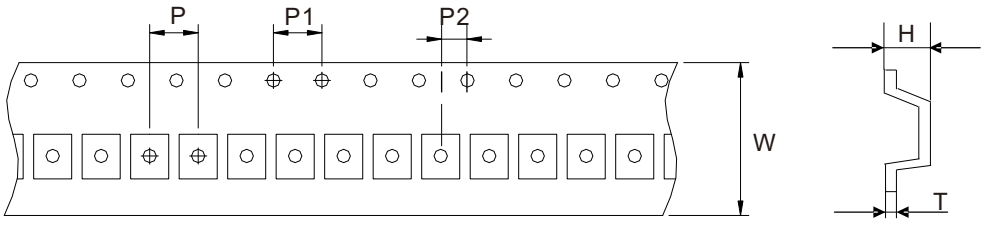

Unit: mm

Type	Dimension	W	P	P1	P2	H	T
	Tolerance	±0.3	±0.1	±0.1	±0.1	±0.15	±0.05
HI0520		12.0	8.0	4.0	2.0	2.30	0.35

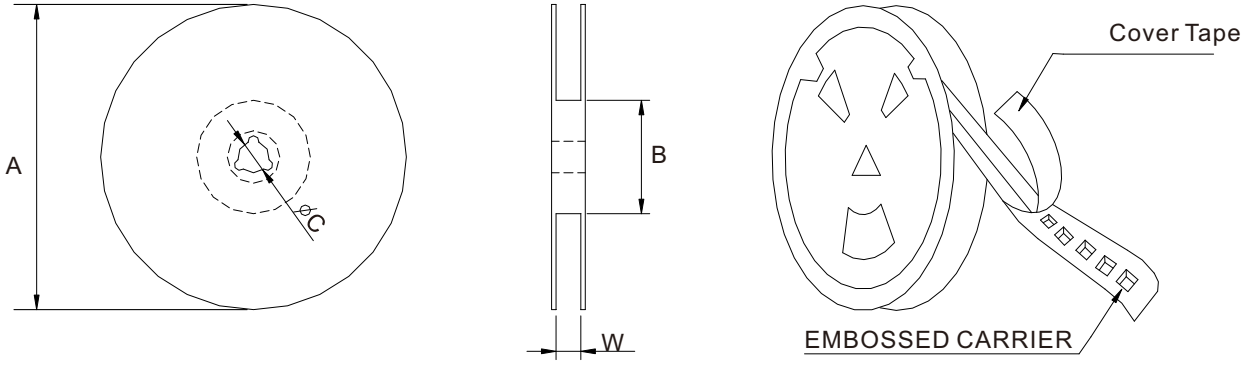

Unit: mm

Type	Dimension	QTY Per Reel	A	B	C	W
	Tolerance	Pcs	±2.0	±0.5	±0.5	±0.5
HI0520		2000	330	97	13.2	12.8