SMD High Current Power Inductor - HI0530 Series

Meisongbei



Features

- Shielded Construction
- Core Material: Metal alloy powder
- Low core loss
- Ultra low buzz noise
- RoHS Compliant and Halogen Free

General Specifications

- Storage temp range: -55°C to +125°C
- Operating temp range: -55°C to +125°C
- Moisture Sensitivity Level(MSL): 1

RoHS COMPLIANT | REACH COMPLIANT | Halogen Free

Shape and Dimensions (Unit:mm)

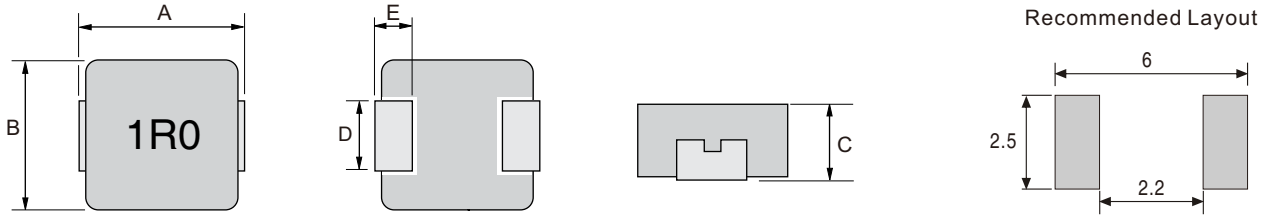

Type	A	B	C	D	E
HI0530	5.4±0.35	5.2±0.2	2.8±0.2	2.2±0.3	1.2±0.2

Electrical Characteristics For HI0530 Series @ 25°C

Part Number	Inductance (μH) ±20%	DCR (mΩ) Max.	Isat (A) Typ.	Irms (A) Typ.
HI0530-R10M	0.10	3	30	25
HI0530-R20M	0.20	3.9	20	14
HI0530-R33M	0.33	5.5	18	14
HI0530-R47M	0.47	8.5	15	11
HI0530-R68M	0.68	12	11.5	9
HI0530-1R0M	1.0	14	10	8.5
HI0530-1R2M	1.2	16	9.5	8.5
HI0530-1R5M	1.5	25	9	8.2
HI0530-2R2M	2.2	29	7	7
HI0530-3R3M	3.3	38	6	5.5
HI0530-4R7M	4.7	60	4.6	4.5
HI0530-6R8M	6.8	90	3.6	3.5
HI0530-100M	10	125	3.5	3.2

- Inductance tested at 100kHz, 1.0Vrms, 0.0Adc
- Heat Rating Current (Irms): Current that cause the temperature 40°C rise from 25°C
- Saturation Current (Isat): DC current at which the inductance drops 30% from its value without current

Tape & Reel Specifications:

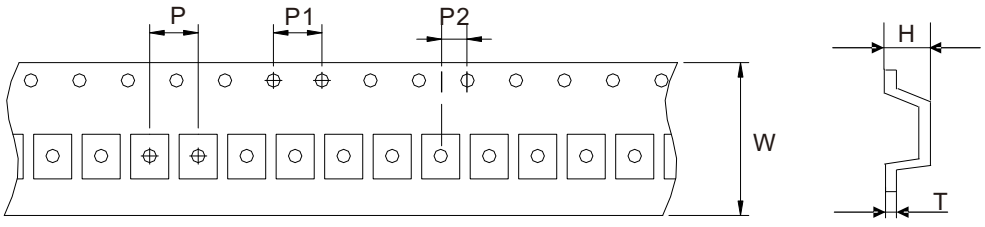

Unit: mm

Type	Dimension	W	P	P1	P2	H	T
	Tolerance	±0.3	±0.1	±0.1	±0.1	±0.15	±0.05
HI0530		12.0	8.0	4.0	2.0	3.30	0.35

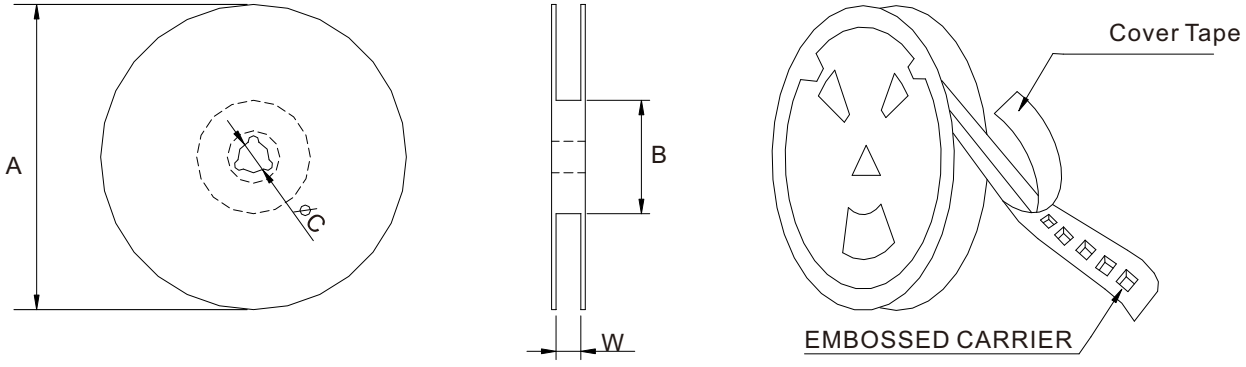

Unit: mm

Type	Dimension	QTY Per Reel	A	B	C	W
	Tolerance	PCS	±2.0	±0.5	±0.5	±0.5
HI0530		2000	330	97	13.2	12.8