SMD High Current Power Inductor - HI0615 Series

Meisongbei



Features

- Shielded Construction
- Core Material: Metal alloy powder
- Low core loss
- Ultra low buzz noise
- RoHS, Halogen Free and REACH compliance

General Specifications

- Storage temp range: -55°C to +125°C
- Operating temp range: -55°C to +125°C
- Moisture Sensitivity Level(MSL): 1

RoHS COMPLIANT | REACH COMPLIANT | Halogen Free

Shape and Dimensions (Unit:mm)

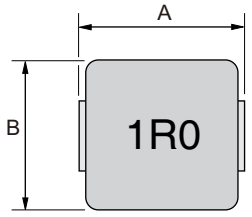

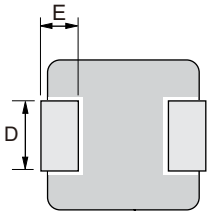

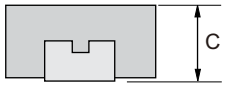

Recommended Layout

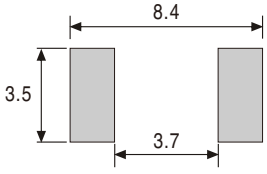

Type	A	B	C	D	E
HI0615	7.0±0.3	6.6±0.2	1.3±0.2	3.0±0.3	1.6±0.3

Electrical Characteristics For HI0615 Series @ 25°C

Part Number	Inductance (μH) ±20%	DCR (mΩ) Max.	Isat (A) Typ.	Irms (A) Typ.
HI0615-R47M	0.47	8.5	16	10
HI0615-R56M	0.56	11	14	9
HI0615-R68M	0.68	12	12	8.5
HI0615-R82M	0.82	17	10	8
HI0615-1R0M	1.0	21	9	6
HI0615-2R2M	2.2	54	7	3.8
HI0615-3R3M	3.3	63	5.5	3.5
HI0615-4R7M	4.7	85	5	3.2
HI0615-6R8M	6.8	135	4	2.5
HI0615-100M	10	175	3	2

- Inductance tested at 100kHz, 1.0Vrms, 0.0Adc
- Heat Rating Current (Irms): Current that cause the temperature 40°C rise from 25°C
- Saturation Current (Isat): DC current at which the inductance drops 30% from its value without current

Tape & Reel Specifications:

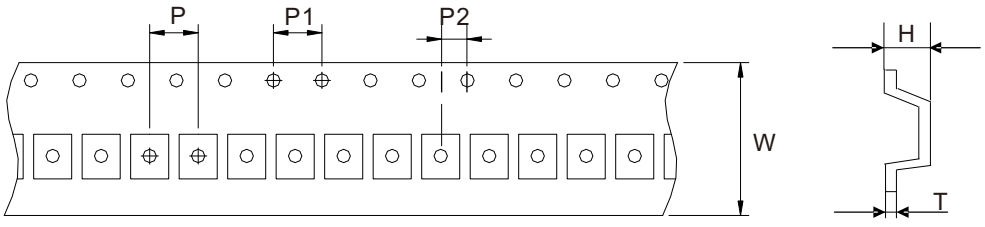

Unit: mm

Type	Dimension	W	P	P1	P2	H	T
	Tolerance	±0.3	±0.1	±0.1	±0.1	±0.1	±0.05
HI0615		16.0	12.0	4.0	2.0	1.70	0.35

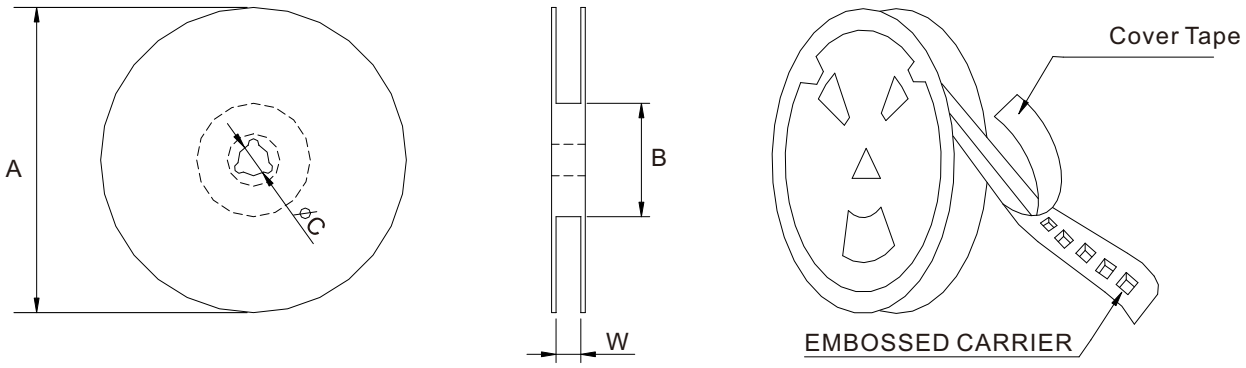

Unit: mm

Type	Dimension	QTY Per Reel	A	B	C	W
	Tolerance	PCS	±2.0	±0.5	±0.5	±0.5
HI0615		2000	330	97	13	16.8