SMD High Current Power Inductor - HI0618 Series

Meisongbei



Features

- Shielded Construction
- Core Material: Metal alloy powder
- Low core loss
- Ultra low buzz noise
- RoHS, Halogen Free and REACH compliance

General Specifications

- Storage temp range: -55°C to +125°C
- Operating temp range: -55°C to +125°C
- Moisture Sensitivity Level(MSL): 1

RoHS COMPLIANT | REACH COMPLIANT | Halogen Free

Shape and Dimensions (Unit:mm)

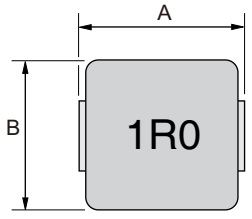

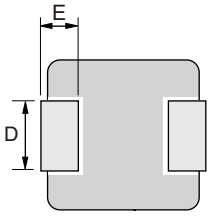

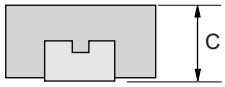

Recommended Layout

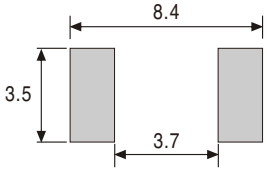

Type	A	B	C	D	E
HI0618	7.0±0.3	6.6±0.2	1.6±0.2	3.0±0.3	1.6±0.3

Electrical Characteristics For HI0618 Series @ 25°C

Part Number	Inductance (μH) ±20%	DCR (mΩ) Max.	Isat (A) Typ.	Irms (A) Typ.
HI0618-R10M	0.10	2.3	38	25
HI0618-R22M	0.22	3.5	24	22
HI0618-R47M	0.47	8.4	18	11.5
HI0618-R68M	0.68	12	16.5	9.5
HI0618-1R0M	1.0	16	12	8.5
HI0618-1R5M	1.5	26	9.2	8
HI0618-2R2M	2.2	35	8	7
HI0618-3R3M	3.3	50	6	4.5
HI0618-4R7M	4.7	62	5	4
HI0618-6R8M	6.8	110	4.5	3
HI0618-100M	10	155	4	2.3
HI0618-220M	22	350	2.3	1.8

- Inductance tested at 100kHz, 1.0Vrms, 0.0Adc
- Heat Rating Current (Irms): Current that cause the temperature 40°C rise from 25°C
- Saturation Current (Isat): DC current at which the inductance drops 30% from its value without current

Tape & Reel Specifications:

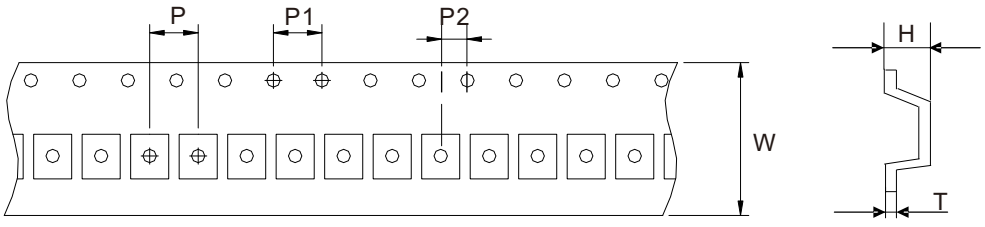

Unit: mm

Type	Dimension	W	P	P1	P2	H	T
	Tolerance	±0.3	±0.1	±0.1	±0.1	±0.1	±0.05
HI0618		16.0	12.0	4.0	2.0	2.10	0.35

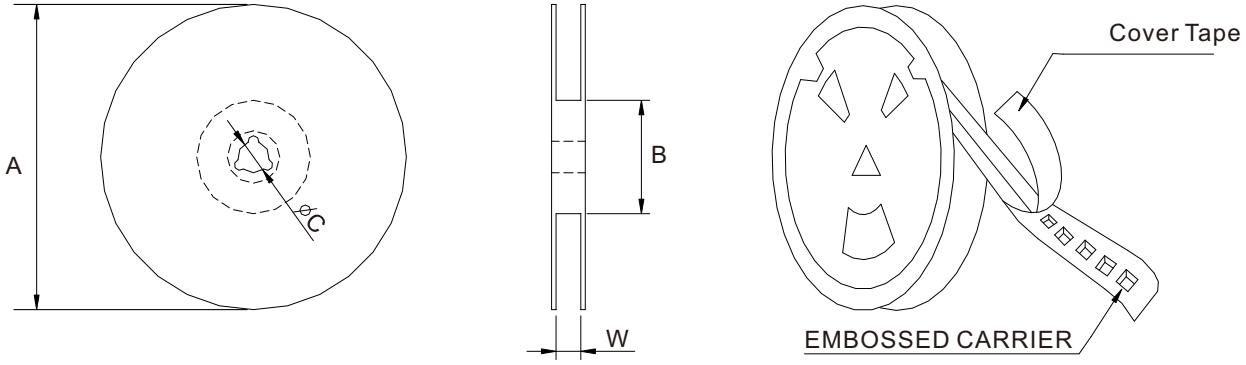

Unit: mm

Type	Dimension	QTY Per Reel	A	B	C	W
	Tolerance	PCS	±2.0	±0.5	±0.5	±0.5
HI0618		2000	330	97	13	16.8