SMD High Current Power Inductor - HI0624 Series

Meisongbei



Features

- Shielded Construction
- Core Material: Metal alloy powder
- Low core loss
- Ultra low buzz noise
- RoHS, Halogen Free and REACH compliance

General Specifications

- Storage temp range: -55°C to +125°C
- Operating temp range: -55°C to +125°C
- Moisture Sensitivity Level(MSL): 1

RoHS COMPLIANT | REACH COMPLIANT | Halogen Free

Shape and Dimensions (Unit:mm)

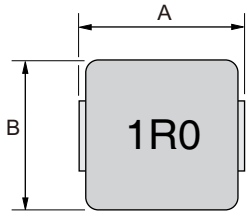

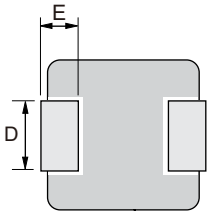

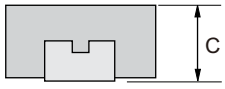

Recommended Layout

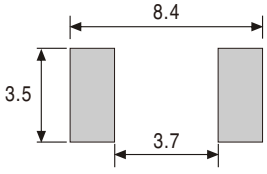

Type	A	B	C	D	E
HI0624	7.0±0.3	6.6±0.2	2.2±0.2	3.0±0.3	1.6±0.3

Electrical Characteristics For HI0624 Series @ 25°C

Part Number	Inductance (μH) ±20%	DCR (mΩ) Max.	Isat (A) Typ.	Irms (A) Typ.
HI0624-R22M	0.22	3	34	21
HI0624-R33M	0.33	4.1	24.5	18
HI0624-R47M	0.47	5.1	22	15
HI0624-R56M	0.56	6.5	17	13
HI0624-R68M	0.68	7	16	12
HI0624-1R0M	1.0	13.5	15	9
HI0624-1R5M	1.5	20	13.5	8.2
HI0624-2R2M	2.2	28	10	7
HI0624-3R3M	3.3	39	8	5.5
HI0624-4R7M	4.7	50	6.5	5
HI0624-6R8M	6.8	70	6	4
HI0624-100M	10	101	4	3.1
HI0624-150M	15	160	3.3	2.5
HI0624-220M	22	230	2.5	2

- Inductance tested at 100kHz, 1.0Vrms, 0.0Adc
- Heat Rating Current (Irms): Current that cause the temperature 40°C rise from 25°C
- Saturation Current (Isat): DC current at which the inductance drops 30% from its value without current

Tape & Reel Specifications:

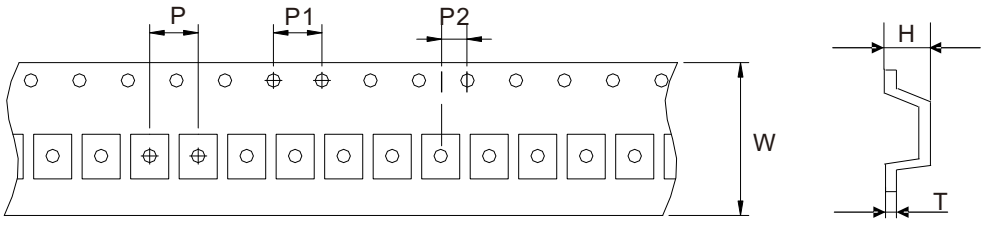

Unit: mm

Type	Dimension	W	P	P1	P2	H	T
	Tolerance	±0.3	±0.1	±0.1	±0.1	±0.1	±0.05
HI0624		16.0	12.0	4.0	2.0	2.70	0.35

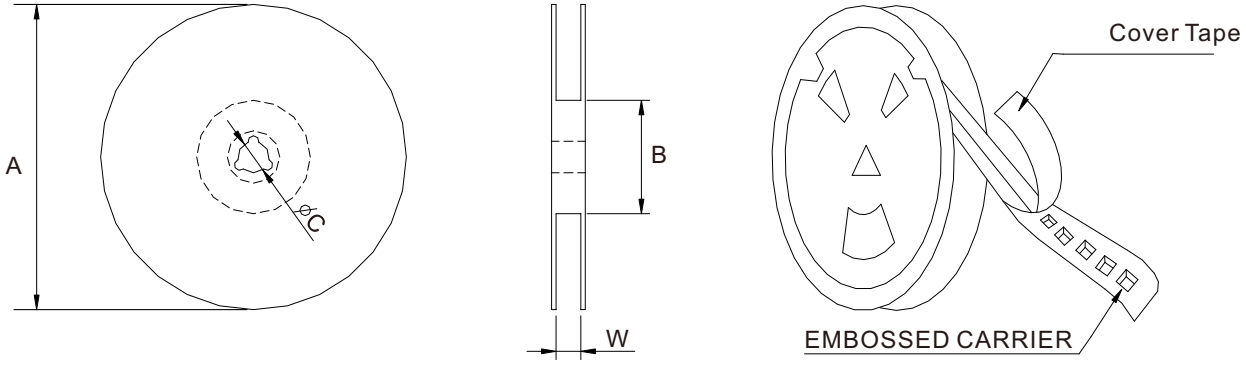

Unit: mm

Type	Dimension	QTY Per Reel	A	B	C	W
	Tolerance	PCS	±2.0	±0.5	±0.5	±0.5
HI0624		1500	330	97	13	16.8