SMD High Current Power Inductor - HI0630 Series

Meisongbei



Features

- Shielded Construction
- Core Material: Metal alloy powder
- Low core loss
- Ultra low buzz noise
- RoHS, Halogen Free and REACH compliance

General Specifications

- Storage temp range: -55°C to +125°C
- Operating temp range: -55°C to +125°C
- Moisture Sensitivity Level(MSL): 1

RoHS COMPLIANT | REACH COMPLIANT | Halogen Free

Shape and Dimensions (Unit:mm)

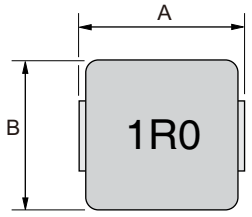

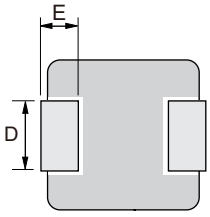

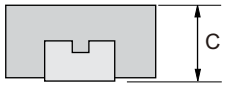

Recommended Layout

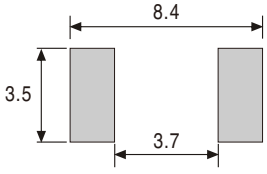

Type	A	B	C	D	E
HI0630	7.0±0.3	6.6±0.2	3.0Max	3.0±0.3	1.6±0.3

Electrical Characteristics For HI0630 Series @ 25°C

Part Number	Inductance (μH) ±20%	DCR (mΩ) Max.	Isat (A) Typ.	Irms (A) Typ.
HI0630-R22M	0.22	3	34	24
HI0630-R33M	0.33	3.5	25	21
HI0630-R47M	0.47	4.1	20	18
HI0630-R56M	0.56	4.5	18	16.5
HI0630-R68M	0.68	5.3	17	16
HI0630-R82M	0.82	6	16	14
HI0630-1R0M	1.0	7.4	15	12
HI0630-1R5M	1.5	12.1	12	12
HI0630-2R2M	2.2	15	10	9.5
HI0630-3R3M	3.3	22	9.5	8.5
HI0630-4R7M	4.7	33	9	6
HI0630-5R6M	5.6	42	6.5	5.5
HI0630-6R8M	6.8	48	6	5
HI0630-8R2M	8.2	60	5.5	5
HI0630-100M	10	68	5.5	4.5
HI0630-150M	15	113	4	3
HI0630-220M	22	170	3	2.5
HI0630-330M	33	270	2.5	2
HI0630-470M	47	385	2	1.5

- Inductance tested at 100kHz, 1.0Vrms, 0.0Adc
- Heat Rating Current (Irms): Current that cause the temperature 40°C rise from 25°C
- Saturation Current (Isat): DC current at which the inductance drops 30% from its value without current

Tape & Reel Specifications:

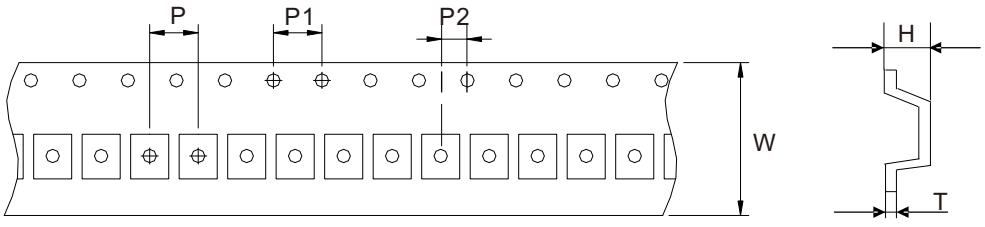

Unit: mm

Type	Dimension	W	P	P1	P2	H	T
	Tolerance	±0.3	±0.1	±0.1	±0.1	±0.15	±0.05
HI0630		16.0	12.0	4.0	2.0	3.30	0.35

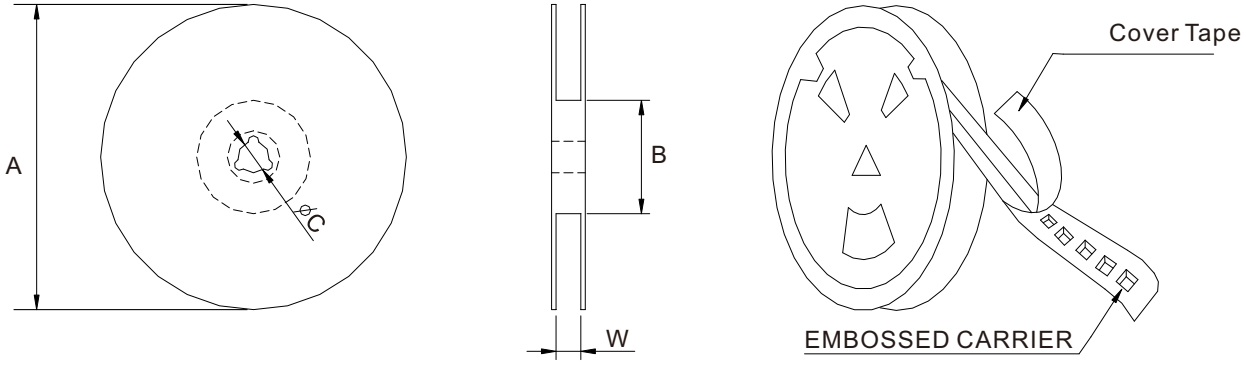

Unit: mm

Type	Dimension	QTY Per Reel	A	B	C	W
	Tolerance	PCS	±2.0	±0.5	±0.5	±0.5
HI0630		1500	330	97	13	16.8