SMD High Current Power Inductor - HI0640 Series

Meisongbei



Features

- Shielded Construction
- Core Material: Metal alloy powder
- Low core loss
- Ultra low buzz noise
- RoHS, Halogen Free and REACH compliance

General Specifications

- Storage temp range: -55°C to +125°C
- Operating temp range: -55°C to +125°C
- Moisture Sensitivity Level(MSL): 1

RoHS COMPLIANT | REACH COMPLIANT | Halogen Free

Shape and Dimensions (Unit:mm)

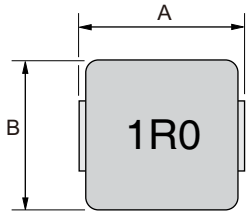

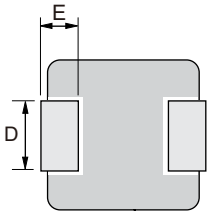

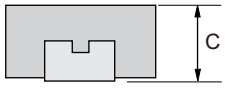

Recommended Layout

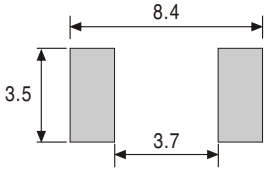

Type	A	B	C	D	E
HI0640	7.0±0.3	6.6±0.2	3.8±0.2	3.0±0.3	1.6±0.3

Electrical Characteristics For HI0640 Series @ 25°C

Part Number	Inductance (μH) ±20%	DCR (mΩ) Max.	Isat (A) Typ.	Irms (A) Typ.
HI0640-R68M	0.68	4.8	19	17
HI0640-1R0M	1.0	6.6	16	13.5
HI0640-1R5M	1.5	10	12.5	12.4
HI0640-2R2M	2.2	14	11	10
HI0640-3R3M	3.3	20	9.5	8.5
HI0640-4R7M	4.7	30	9	6.5
HI0640-6R8M	6.8	45	6.5	5.5
HI0640-8R2M	8.2	55	6	5.2
HI0640-100M	10	65	6	4.8
HI0640-150M	15	95	4.5	3.7
HI0640-220M	22	125	4	3.3
HI0640-330M	33	240	3	2.2
HI0640-470M	47	320	2.5	1.8

- Inductance tested at 100kHz, 1.0Vrms, 0.0Adc
- Heat Rating Current (Irms): Current that cause the temperature 40°C rise from 25°C
- Saturation Current (Isat): DC current at which the inductance drops 30% from its value without current

Tape & Reel Specifications:

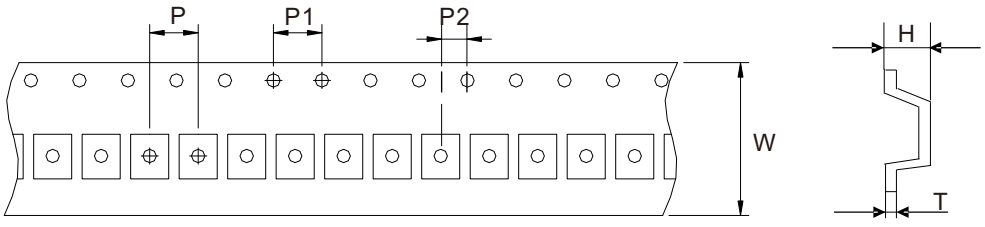

Unit: mm

Type	Dimension	W	P	P1	P2	H	T
	Tolerance	±0.3	±0.1	±0.1	±0.1	±0.15	±0.05
HI0640		16.0	12.0	4.0	2.0	4.30	0.35

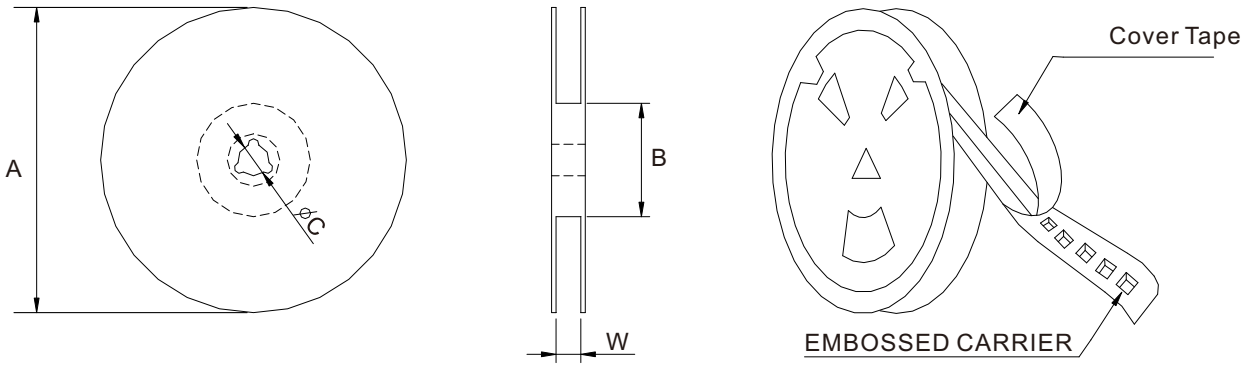

Unit: mm

Type	Dimension	QTY Per Reel	A	B	C	W
	Tolerance	PCS	±2.0	±0.5	±0.5	±0.5
HI0640		1000	330	97	13	16.8