SMD High Current Power Inductor - HI0650 Series

Meisongbei



Features

- Shielded Construction
- Core Material: Metal alloy powder
- Low core loss
- Ultra low buzz noise
- RoHS, Halogen Free and REACH compliance

General Specifications

- Storage temp range: -55°C to +125°C
- Operating temp range: -55°C to +125°C
- Moisture Sensitivity Level(MSL): 1

RoHS COMPLIANT | REACH COMPLIANT | Halogen Free

Shape and Dimensions (Unit:mm)

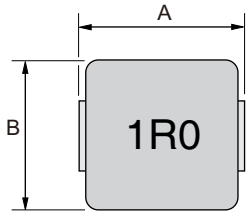

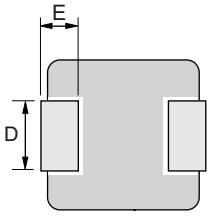

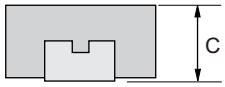

Recommended Layout

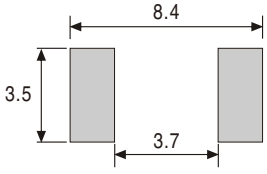

Type	A	B	C	D	E
HI0650	7.0±0.3	6.6±0.2	4.8±0.2	3.0±0.3	1.6±0.3

Electrical Characteristics For HI0650 Series @ 25°C

Part Number	Inductance (μH) ±20%	DCR (mΩ) Max.	Isat (A) Typ.	Irms (A) Typ.
HI0650-R47M	0.47	3.9	21	20
HI0650-R68M	0.68	4.5	18	16.5
HI0650-1R0M	1.0	6.6	16	12
HI0650-1R5M	1.5	10	13	9.5
HI0650-2R2M	2.2	12.5	11	9
HI0650-3R3M	3.3	22	10	8.5
HI0650-4R7M	4.7	29	8	6
HI0650-6R8M	6.8	41	6.3	5.8
HI0650-8R2M	8.2	48	5.5	5.5
HI0650-100M	10	60	5.3	4.5
HI0650-150M	15	90	4	3.1
HI0650-220M	22	140	3.5	2.6
HI0650-330M	33	190	3	2.3
HI0650-470M	47	230	2.6	2

- Inductance tested at 100kHz, 1.0Vrms, 0.0Adc
- Heat Rating Current (Irms): Current that cause the temperature 40°C rise from 25°C
- Saturation Current (Isat): DC current at which the inductance drops 30% from its value without current

Tape & Reel Specifications:

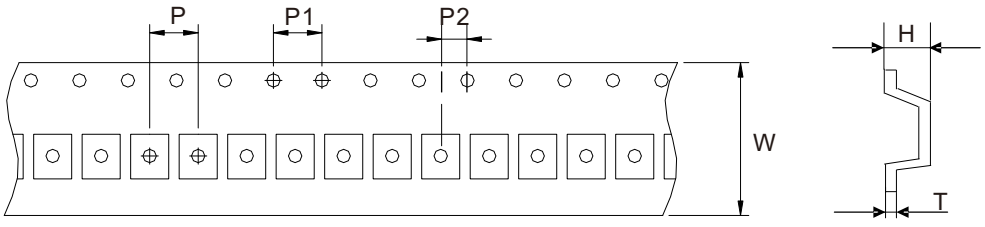

Unit: mm

Type	Dimension	W	P	P1	P2	H	T
	Tolerance	±0.3	±0.1	±0.1	±0.1	±0.15	±0.05
HI0650		16.0	12.0	4.0	2.0	5.50	0.35

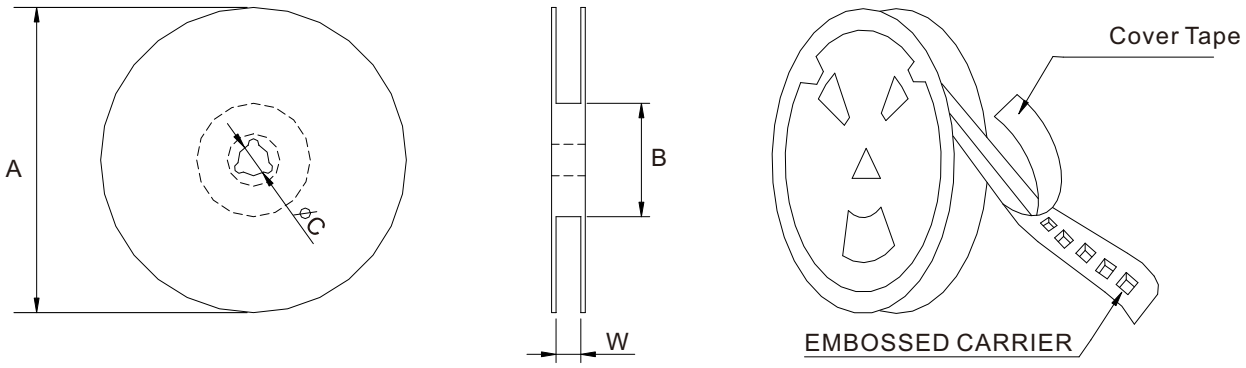

Unit: mm

Type	Dimension	QTY Per Reel	A	B	C	W
	Tolerance	PCS	±2.0	±0.5	±0.5	±0.5
HI0650		1000	330	97	13	16.8