SMD High Current Power Inductor - HI0840 Series

Meisongbei



Features

- Shielded Construction
- Core Material: Metal alloy powder
- Low core loss
- Ultra low buzz noise
- RoHS, Halogen Free and REACH compliance

General Specifications

- Storage temp range: -55°C to +125°C
- Operating temp range: -55°C to +125°C
- Moisture Sensitivity Level(MSL): 1

RoHS COMPLIANT | REACH COMPLIANT | Halogen Free

Shape and Dimensions (Unit:mm)

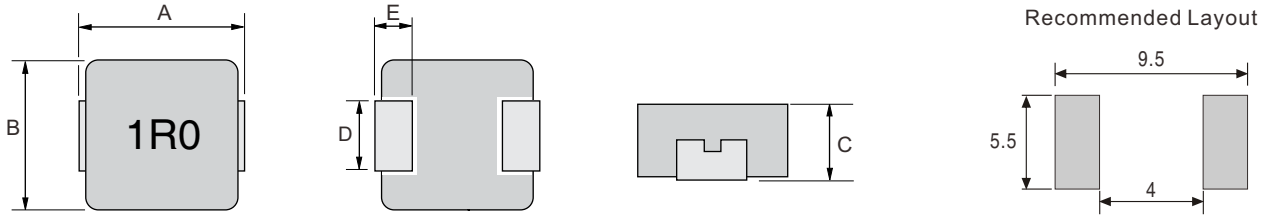

Type	A	B	C	D	E
HI0840	8.8±0.4	8.2±0.3	3.8±0.2	5.0±0.3	1.4±0.3

Electrical Characteristics For HI0840 Series @ 25°C

Part Number	Inductance (μH) ±20%	DCR (mΩ) Max.	Isat (A) Typ.	Irms (A) Typ.
HI0840-R22M	0.22	1.8	60	36
HI0840-R33M	0.33	2.4	45	30
HI0840-R47M	0.47	2.8	42	28
HI0840-R56M	0.56	3.2	26	24
HI0840-R68M	0.68	3.8	24	23
HI0840-R82M	0.82	4.4	21	21
HI0840-1R0M	1.0	4.62	19	19
HI0840-1R5M	1.5	7.6	17	17
HI0840-1R8M	1.8	11	15	15
HI0840-2R2M	2.2	11.4	14	14
HI0840-3R3M	3.3	15	12.5	12
HI0840-4R7M	4.7	26.5	11.5	9.5
HI0840-5R6M	5.6	30	11	9
HI0840-6R8M	6.8	36.8	9	8
HI0840-8R2M	8.2	46	8.7	7
HI0840-100M	10	59	8	6.5
HI0840-150M	15	71	5.5	5.4
HI0840-220M	22	113	5	4.8
HI0840-330M	33	156	3.5	3.5
HI0840-470M	47	225	3.1	2.9

- Inductance tested at 100kHz, 1.0Vrms, 0.0Adc
- Heat Rating Current (Irms): Current that cause the temperature 40°C rise from 25°C
- Saturation Current (Isat): DC current at which the inductance drops 30% from its value without current

Tape & Reel Specifications:

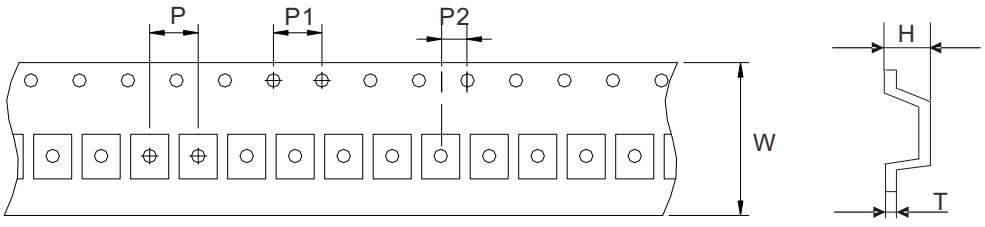

Unit: mm

Type	Dimension	W	P	P1	P2	H	T
	Tolerance	±0.3	±0.1	±0.1	±0.1	±0.15	±0.05
HI0840		24.0	16.0	4.0	2.0	4.40	0.35

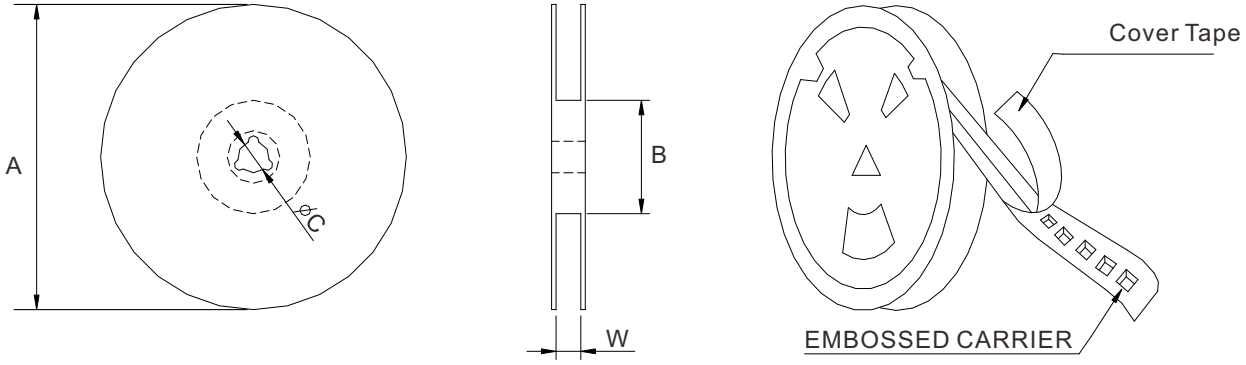

Unit: mm

Type	Dimension	QTY Per Reel	A	B	C	W
	Tolerance	PCS	±2.0	±0.5	±0.5	±0.5
HI0840		800	330	97	13	24.8