SMD High Current Power Inductor - HI1030 Series

Meisongbei



Features

- Shielded Construction
- Core Material: Metal alloy powder
- Low core loss
- Ultra low buzz noise
- RoHS, Halogen Free and REACH compliance

General Specifications

- Storage temp range: -55°C to +125°C
- Operating temp range: -55°C to +125°C
- Moisture Sensitivity Level(MSL): 1

RoHS COMPLIANT | REACH COMPLIANT | Halogen Free

Shape and Dimensions (Unit:mm)

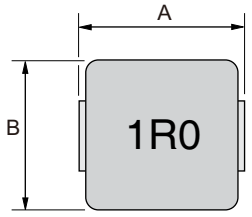

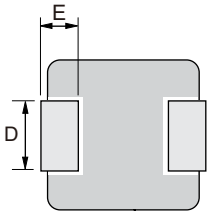

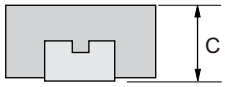

Recommended Layout

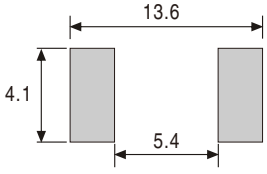

Type	A	B	C	D	E
HI1030	11.5 Max.	10.0±0.3	2.8±0.2	3.0±0.5	2.0±0.5

Electrical Characteristics For HI1030 Series @ 25°C

Part Number	Inductance (μH) ±20%	DCR (mΩ) Max.	Isat (A) Typ.	Irms (A) Typ.
HI1030-R22M	0.22	1.2	50	33
HI1030-R33M	0.33	1.6	32	23
HI1030-R36M	0.36	1.6	28	23
HI1030-R47M	0.47	2.5	26	22
HI1030-1R0M	1.0	6	21	15
HI1030-2R2M	2.2	9	14	11
HI1030-3R3M	3.3	16	12	9
HI1030-4R7M	4.7	24	10	7
HI1030-8R2M	8.2	45	7	5
HI1030-330M	33	160	4	2.6

- Inductance tested at 100kHz, 1.0Vrms, 0.0Adc
- Heat Rating Current (Irms): Current that cause the temperature 40°C rise from 25°C
- Saturation Current (Isat): DC current at which the inductance drops 30% from its value without current

Tape & Reel Specifications:

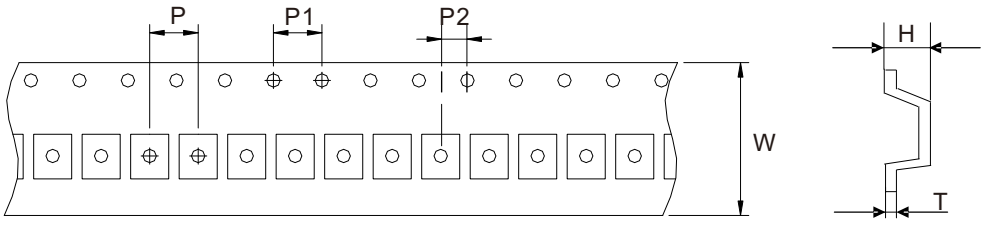

Unit: mm

Type	Dimension	W	P	P1	P2	H	T
	Tolerance	±0.3	±0.1	±0.1	±0.1	±0.15	±0.05
HI1030		24.0	16.0	4.0	2.0	3.30	0.35

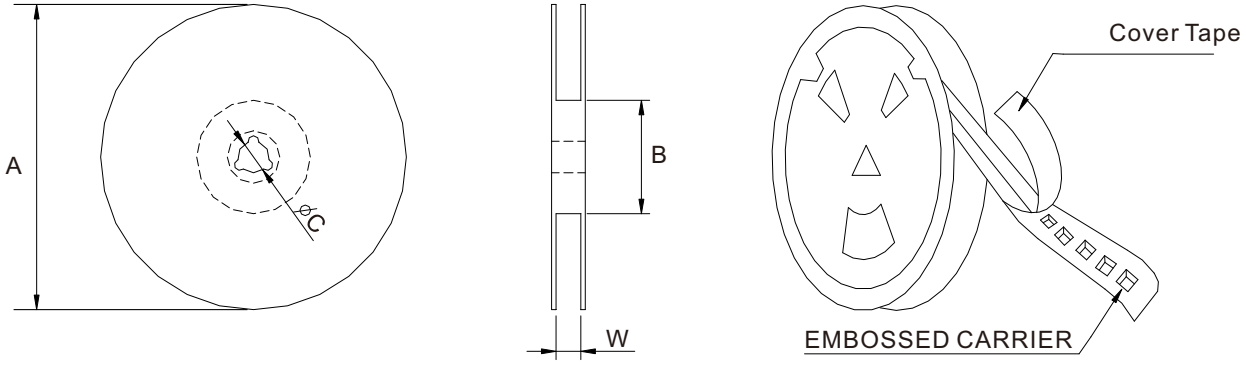

Unit: mm

Type	Dimension	QTY Per Reel	A	B	C	W
	Tolerance	PCS	±2.0	±0.5	±0.5	±0.5
HI1030		800	330	97	13	24.8