SMD High Current Power Inductor - HI1040 Series

Meisongbei



Features

- Shielded Construction
- Core Material: Metal alloy powder
- Low core loss
- Ultra low buzz noise
- RoHS, Halogen Free and REACH compliance

General Specifications

- Storage temp range: -55°C to +125°C
- Operating temp range: -55°C to +125°C
- Moisture Sensitivity Level(MSL): 1

RoHS COMPLIANT | REACH COMPLIANT | Halogen Free

Shape and Dimensions (Unit:mm)

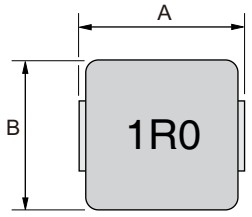

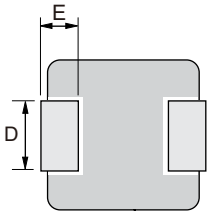

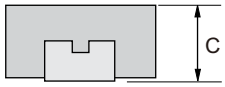

Recommended Layout

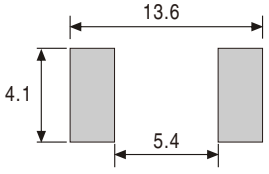

Type	A	B	C	D	E
HI1040	11.5 Max.	10.0±0.3	3.8±0.2	3.0±0.5	2.0±0.5

Electrical Characteristics For HI1040 Series @ 25°C

Part Number	Inductance (μH) ±20%	DCR (mΩ) Max.	Isat (A) Typ.	Irms (A) Typ.
HI1040-R15M	0.15	0.65	75	45
HI1040-R22M	0.22	1	60	35
HI1040-R30M	0.30	1.1	45	35
HI1040-R36M	0.36	1.2	45	30
HI1040-R47M	0.47	1.7	40	30
HI1040-R56M	0.56	1.8	33	25
HI1040-R68M	0.68	2.4	30	23
HI1040-R80M	0.80	2.7	29	23
HI1040-1R0M	1.0	3.3	28	19
HI1040-1R5M	1.5	4.2	24	16
HI1040-2R2M	2.2	7	16.5	12
HI1040-3R3M	3.3	11.8	16	11
HI1040-4R7M	4.7	20	13	9
HI1040-6R8M	6.8	25	12	8.5
HI1040-8R2M	8.2	27	9	8
HI1040-100M	10	30	8.5	7.8
HI1040-150M	15	45	7	6.5
HI1040-220M	22	66	5.5	5
HI1040-330M	33	92	4.8	4.4
HI1040-470M	47	145	3.5	3.3
HI1040-680M	68	195	3	2.5
HI1040-820M	82	285	2.8	2.3
HI1040-101M	100	340	2.3	2

Tape & Reel Specifications:

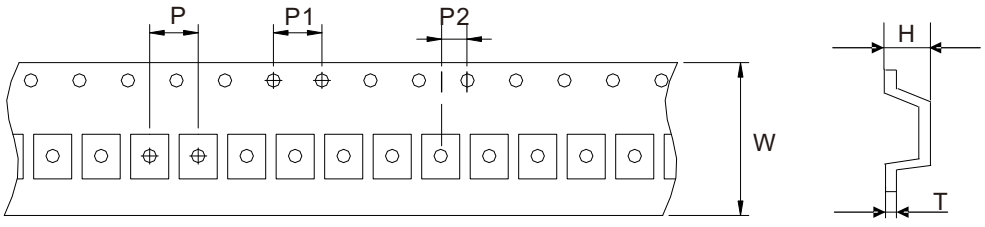

Unit: mm

Type	Dimension	W	P	P1	P2	H	T
	Tolerance	±0.3	±0.1	±0.1	±0.1	±0.15	±0.05
HI1040		24.0	16.0	4.0	2.0	4.30	0.35

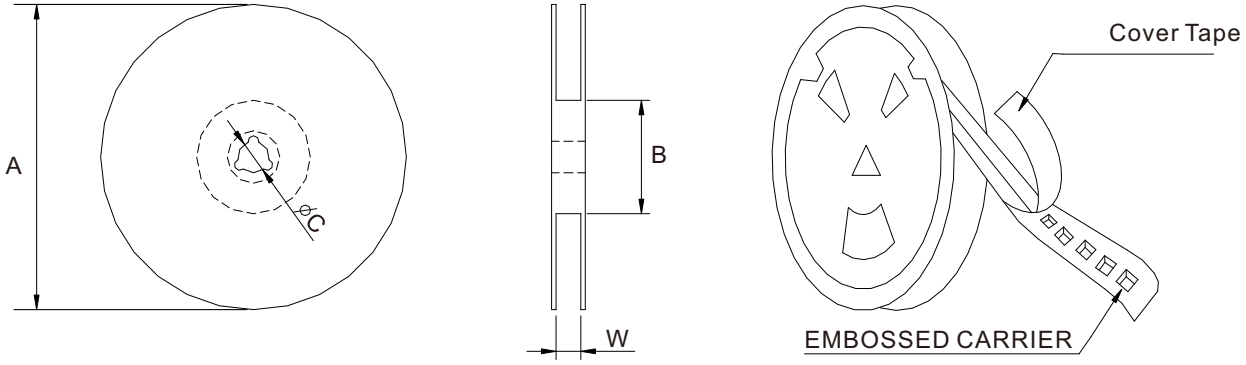

Unit: mm

Type	Dimension	QTY Per Reel	A	B	C	W
	Tolerance	PCS	±2.0	±0.5	±0.5	±0.5
HI1040		500	330	97	13	24.8