SMD High Current Power Inductor - HI1050 Series

Meisongbei



Features

- Shielded Construction
- Core Material: Metal alloy powder
- Low core loss
- Ultra low buzz noise
- RoHS, Halogen Free and REACH compliance

General Specifications

- Storage temp range: -55°C to +125°C
- Operating temp range: -55°C to +125°C
- Moisture Sensitivity Level(MSL): 1

RoHS COMPLIANT | REACH COMPLIANT | Halogen Free

Shape and Dimensions (Unit:mm)

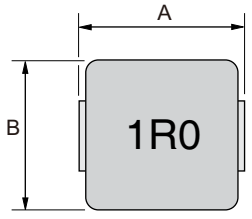

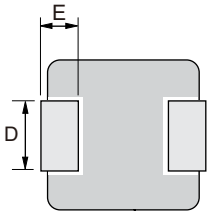

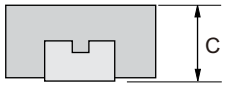

Recommended Layout

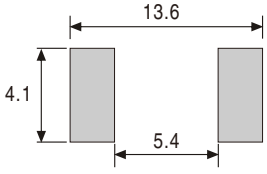

Type	A	B	C	D	E
HI1050	11.5 Max.	10.0±0.3	4.8±0.2	3.0±0.5	2.0±0.5

Electrical Characteristics For HI1050 Series @ 25°C

Part Number	Inductance (μH) ±20%	DCR (mΩ) Max.	Isat (A) Typ.	Irms (A) Typ.
HI1050-R22M	0.22	0.8	65	37
HI1050-1R0M	1.0	3	30	23
HI1050-1R5M	1.5	3.8	25	21
HI1050-2R2M	2.2	6	19	15
HI1050-3R3M	3.3	10	16	13
HI1050-4R7M	4.7	14	15	11
HI1050-5R6M	5.6	17	14	9.5
HI1050-6R8M	6.8	18.5	14	9
HI1050-100M	10	28	10	8
HI1050-150M	15	42	7.5	6.5
HI1050-220M	22	50	6	5.5
HI1050-330M	33	86	5.2	4.8
HI1050-470M	47	127	4.5	3.7
HI1050-101M	100	290	2.8	2.1

- Inductance tested at 100kHz, 1.0Vrms, 0.0Adc
- Heat Rating Current (Irms): Current that cause the temperature 40°C rise from 25°C
- Saturation Current (Isat): DC current at which the inductance drops 30% from its value without current

Tape & Reel Specifications:

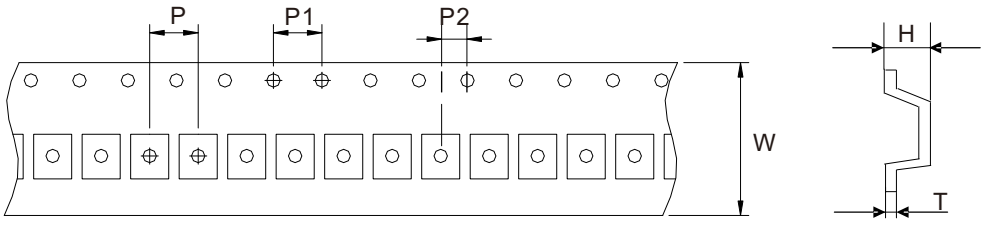

Unit: mm

Type	Dimension	W	P	P1	P2	H	T
	Tolerance	±0.3	±0.1	±0.1	±0.1	±0.15	±0.05
HI1050		24.0	16.0	4.0	2.0	5.40	0.35

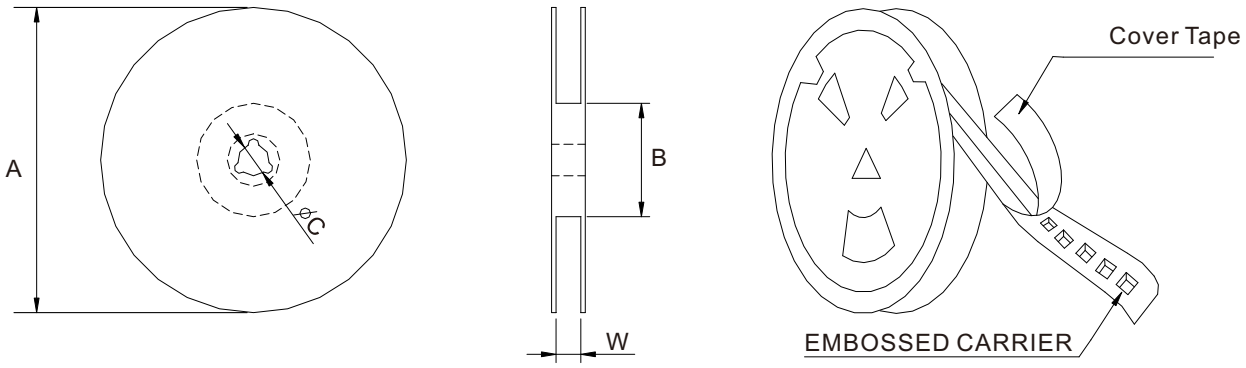

Unit: mm

Type	Dimension	QTY Per Reel	A	B	C	W
	Tolerance	PCS	±2.0	±0.5	±0.5	±0.5
HI1050		500	330	97	13	24.8