SMD High Current Power Inductor - HI1240 Series

Meisongbei



Features

- Shielded Construction
- Core Material: Metal alloy powder
- Low core loss
- Ultra low buzz noise
- RoHS, Halogen Free and REACH compliance

Note

- HI1240-R22M/R47M Dimensions D:3.85±0.5
- HI1240-R68M~220M Dimensions D:5.0±0.3

General Specifications

- Storage temp range: -55°C to +125°C
- Operating temp range: -55°C to +125°C
- Moisture Sensitivity Level(MSL): 1

RoHS COMPLIANT | REACH COMPLIANT | Halogen Free

Shape and Dimensions (Unit:mm)

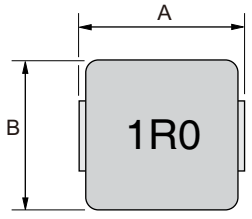

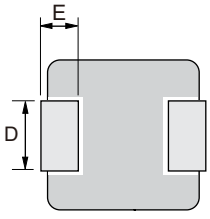

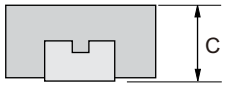

Recommended Layout

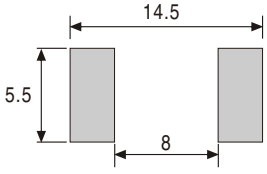

Type	A	B	C	D	E
HI1240	13.45±0.35	12.8±0.5	4.0 Max	3.85±0.5 / 5.0±0.3	2.0±0.5

Electrical Characteristics For HI1240 Series @ 25°C

Part Number	Inductance (μH) ±20%	DCR (mΩ) Max.	Isat (A) Typ.	Irms (A) Typ.
HI1240-R22M	0.22	0.9	50	42
HI1240-R47M	0.47	2	48	33
HI1240-R68M	0.68	3.5	47	28
HI1240-R82M	0.82	4.5	40	28
HI1240-1R0M	1.0	7.5	35	24
HI1240-1R5M	1.5	9.5	30.5	20
HI1240-2R2M	2.2	11.5	26	18
HI1240-3R3M	3.3	13	21	15
HI1240-4R7M	4.7	14.5	18	13
HI1240-6R8M	6.8	20	14	9
HI1240-100M	10	25	10	8
HI1240-150M	15	39	7.5	6.5
HI1240-220M	22	51	6	4.5

- Inductance tested at 100kHz, 1.0Vrms, 0.0Adc
- Heat Rating Current (Irms): Current that cause the temperature 40°C rise from 25°C
- Saturation Current (Isat): DC current at which the inductance drops 30% from its value without current

Tape & Reel Specifications:

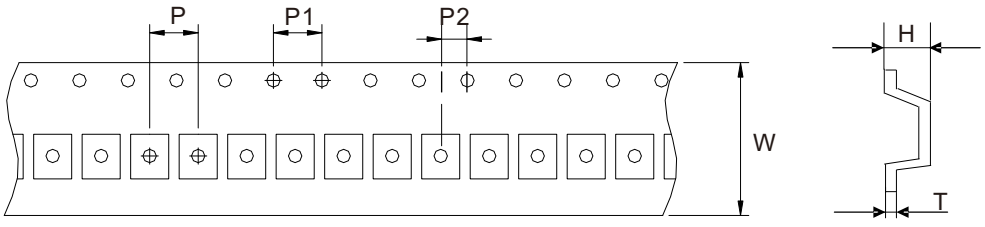

Unit: mm

Type	Dimension	W	P	P1	P2	H	T
	Tolerance	±0.3	±0.1	±0.1	±0.1	±0.15	±0.05
HI1240		24.0	16.0	4.0	2.0	4.30	0.50

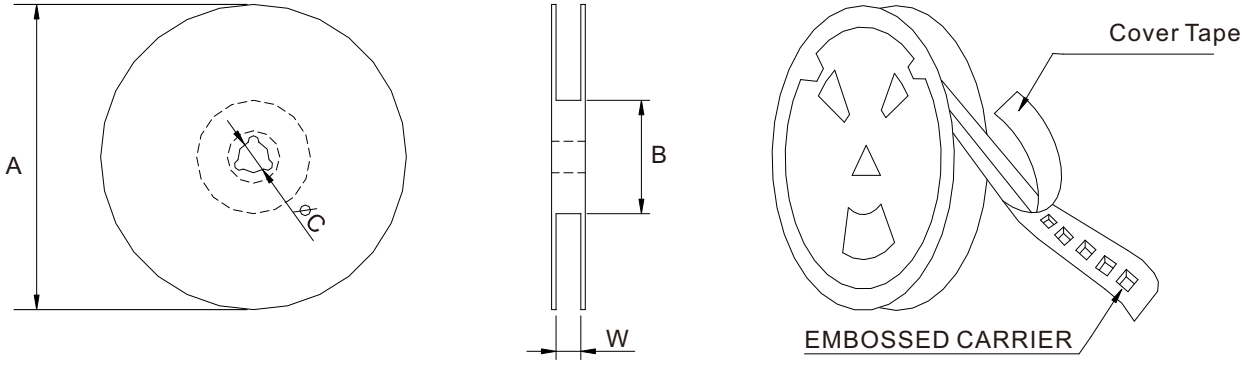

Unit: mm

Type	Dimension	QTY Per Reel	A	B	C	W
	Tolerance	PCS	±2.0	±0.5	±0.5	±0.5
HI1240		500	330	97	13	24.8