SMD High Current Power Inductor - HI1250 Series

Meisongbei



Features

- Shielded Construction
- Core Material: Metal alloy powder
- Low core loss
- Ultra low buzz noise
- RoHS, Halogen Free and REACH compliance

Note

- HI1250-R22M~2R2M Dimensions D:3.85±0.5
- HI1250-3R3M~680M Dimensions D:5.0±0.3

General Specifications

- Storage temp range: -55°C to +125°C
- Operating temp range: -55°C to +125°C
- Moisture Sensitivity Level(MSL): 1

RoHS COMPLIANT | REACH COMPLIANT | Halogen Free

Shape and Dimensions (Unit:mm)

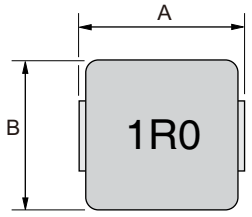

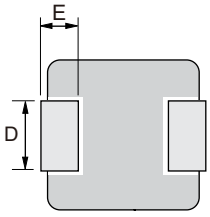

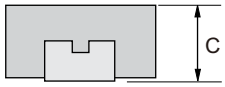

Recommended Layout

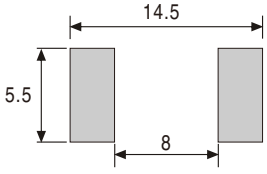

Type	A	B	C	D	E
HI1250	13.45±0.35	12.8±0.5	5.0 Max	3.85±0.5 / 5.0±0.3	2.0±0.5

Electrical Characteristics For HI1250 Series @ 25°C

Part Number	Inductance (μH) ±20%	DCR (mΩ) Max.	Isat (A) Typ.	Irms (A) Typ.
HI1250-R22M	0.22	0.7	75	50
HI1250-R36M	0.36	0.85	50	42
HI1250-R50M	0.50	1.15	48	38
HI1250-R68M	0.68	1.55	46	33
HI1250-R82M	0.82	1.67	39	30
HI1250-1R0M	1.0	2.2	35	26
HI1250-1R5M	1.5	3.2	33	23
HI1250-2R2M	2.2	5	24	15
HI1250-3R3M	3.3	7	22	14
HI1250-4R7M	4.7	9	20	13
HI1250-6R8M	6.8	18	16	12
HI1250-8R2M	8.2	20	13	9.5
HI1250-100M	10	22	12	9
HI1250-150M	15	30	10	8
HI1250-220M	22	58	6.5	4.5
HI1250-330M	33	84	6	3.5
HI1250-470M	47	130	5	3

- Inductance tested at 100kHz, 1.0Vrms, 0.0Adc
- Heat Rating Current (Irms): Current that cause the temperature 40°C rise from 25°C
- Saturation Current (Isat): DC current at which the inductance drops 30% from its value without current

Tape & Reel Specifications:

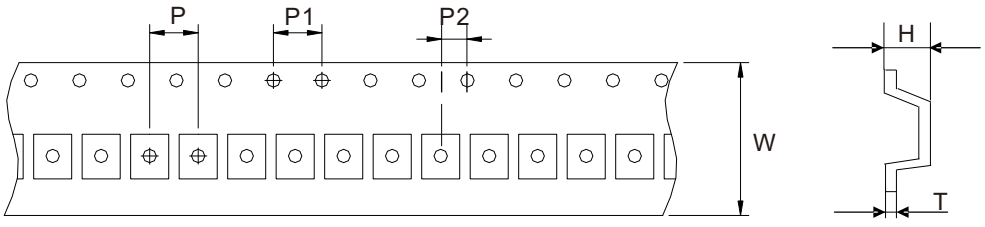

Unit: mm

Type	Dimension	W	P	P1	P2	H	T
	Tolerance	±0.3	±0.1	±0.1	±0.1	±0.15	±0.05
HI1250		24.0	16.0	4.0	2.0	5.40	0.50

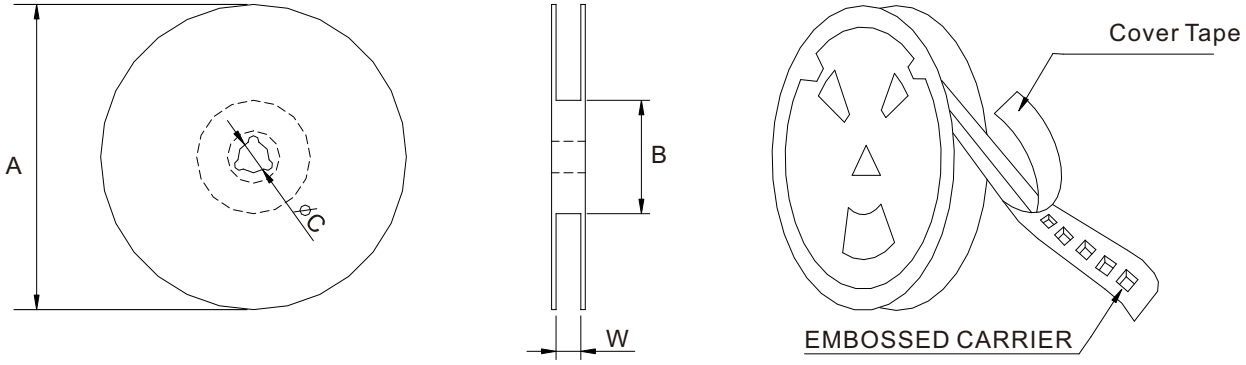

Unit: mm

Type	Dimension	QTY Per Reel	A	B	C	W
	Tolerance	PCS	±2.0	±0.5	±0.5	±0.5
HI1250		500	330	97	13	24.8