SMD High Current Power Inductor - HI1260 Series

Meisongbei



Features

- Shielded Construction
- Core Material: Metal alloy powder
- Low core loss
- Ultra low buzz noise
- RoHS, Halogen Free and REACH compliance

General Specifications

- Storage temp range: -55°C to +125°C
- Operating temp range: -55°C to +125°C
- Moisture Sensitivity Level(MSL): 1

RoHS COMPLIANT | REACH COMPLIANT | Halogen Free

Shape and Dimensions (Unit:mm)

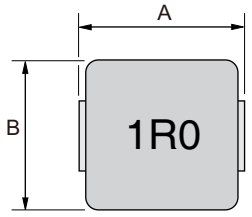

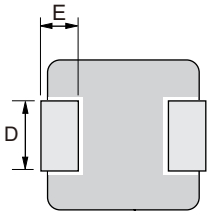

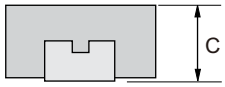

Recommended Layout

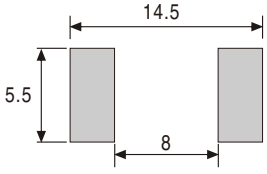

Type	A	B	C	D	E
HI1260	13.45±0.35	12.8±0.5	6.0 Max	5.0±0.3	2.0±0.5

Electrical Characteristics For HI1260 Series @ 25°C

Part Number	Inductance (μH) ±20%	DCR (mΩ) Max.	Isat (A) Typ.	Irms (A) Typ.
HI1260-4R7M	4.7	9	24	15
HI1260-5R6M	5.6	11	22.5	13
HI1260-6R8M	6.8	13.5	19	12
HI1260-8R2M	8.2	16	13.5	11
HI1260-100M	10	20.7	12.5	10
HI1260-120M	12	23	10	9
HI1260-150M	15	29	9	8.5
HI1260-180M	18	35	8	7.5
HI1260-220M	22	39.5	7.5	7
HI1260-270M	27	56	6.5	6
HI1260-330M	33	75	6	5.5
HI1260-470M	47	90	5.5	5
HI1260-680M	68	140	4.5	4
HI1260-101M	100	200	3.5	3
HI1260-121M	120	235	3.2	2
HI1260-151M	150	350	2.7	1.5

- Inductance tested at 100kHz, 1.0Vrms, 0.0Adc
- Heat Rating Current (Irms): Current that cause the temperature 40°C rise from 25°C
- Saturation Current (Isat): DC current at which the inductance drops 30% from its value without current

Tape & Reel Specifications:

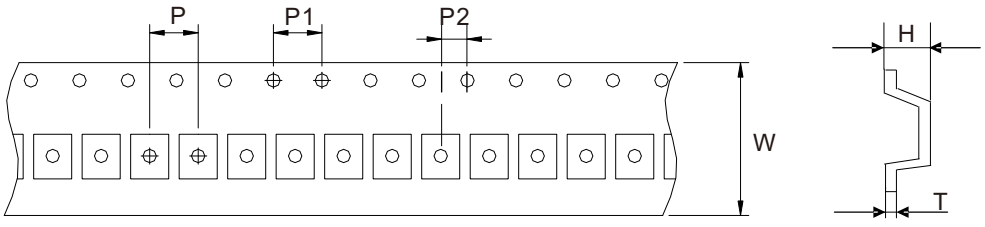

Unit: mm

Type	Dimension	W	P	P1	P2	H	T
	Tolerance	±0.3	±0.1	±0.1	±0.1	±0.15	±0.05
HI1260		24.0	16.0	4.0	2.0	6.30	0.50

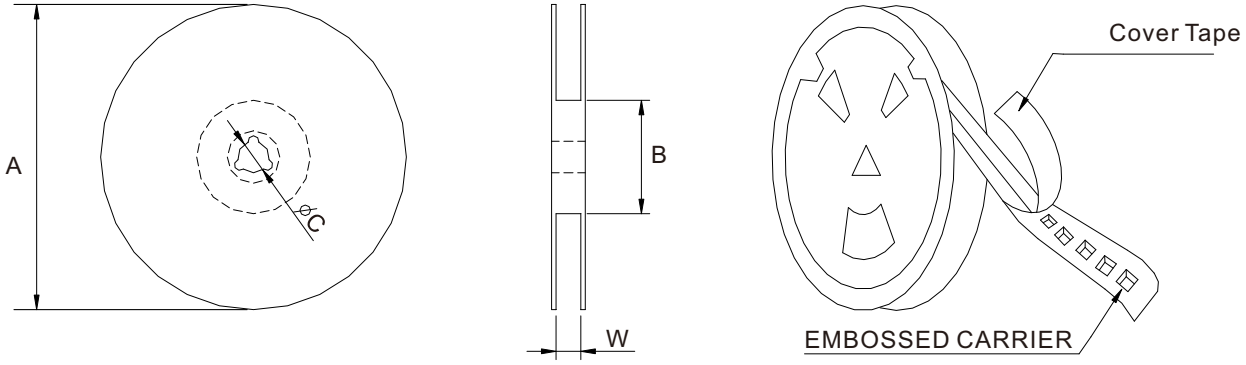

Unit: mm

Type	Dimension	QTY Per Reel	A	B	C	W
	Tolerance	PCS	±2.0	±0.5	±0.5	±0.5
HI1260		500	330	97	13	24.8