SMD High Current Power Inductor - HI1265 Series

Meisongbei



Features

- Shielded Construction
- Core Material: Metal alloy powder
- Low core loss
- Ultra low buzz noise
- RoHS, Halogen Free and REACH compliance

General Specifications

- Storage temp range: -55°C to +125°C
- Operating temp range: -55°C to +125°C
- Moisture Sensitivity Level(MSL): 1

RoHS COMPLIANT | REACH COMPLIANT | Halogen Free

Shape and Dimensions (Unit:mm)

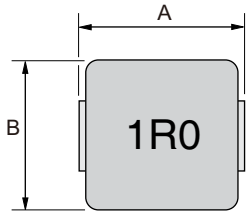

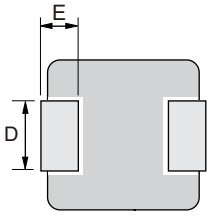

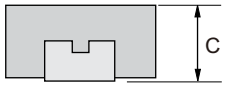

Recommended Layout

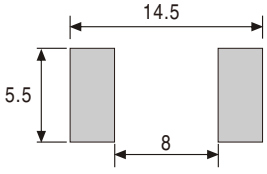

Type	A	B	C	D	E
HI1265	13.45±0.35	12.6±0.4	6.5 Max	5.0±0.3	2.0±0.5

Electrical Characteristics For HI1265 Series @ 25°C

Part Number	Inductance (μH) ±20%	DCR (mΩ) Max.	Isat (A) Typ.	Irms (A) Typ.
HI1265-4R7M	4.7	8.5	24	16
HI1265-5R6M	5.6	10.5	22.5	14
HI1265-6R8M	6.8	12	19	13
HI1265-8R2M	8.2	14	16	12
HI1265-100M	10	16.5	15	11
HI1265-150M	15	26	11	9.5
HI1265-220M	22	36	9	8
HI1265-330M	33	65	8	6.5
HI1265-470M	47	70	6.8	5.5
HI1265-680M	68	120	5.2	4.8
HI1265-820M	82	135	4.5	4
HI1265-101M	100	170	4	3.5

- Inductance tested at 100kHz, 1.0Vrms, 0.0Adc
- Heat Rating Current (Irms): Current that cause the temperature 40°C rise from 25°C
- Saturation Current (Isat): DC current at which the inductance drops 30% from its value without current

Tape & Reel Specifications:

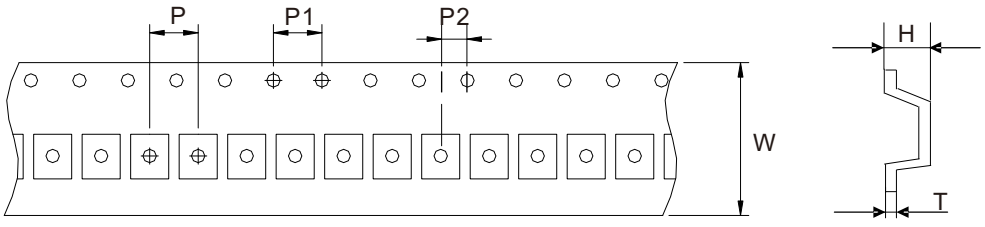

Unit: mm

Type	Dimension	W	P	P1	P2	H	T
	Tolerance	±0.3	±0.1	±0.1	±0.1	±0.15	±0.05
HI1265		24.0	16.0	4.0	2.0	6.80	0.50

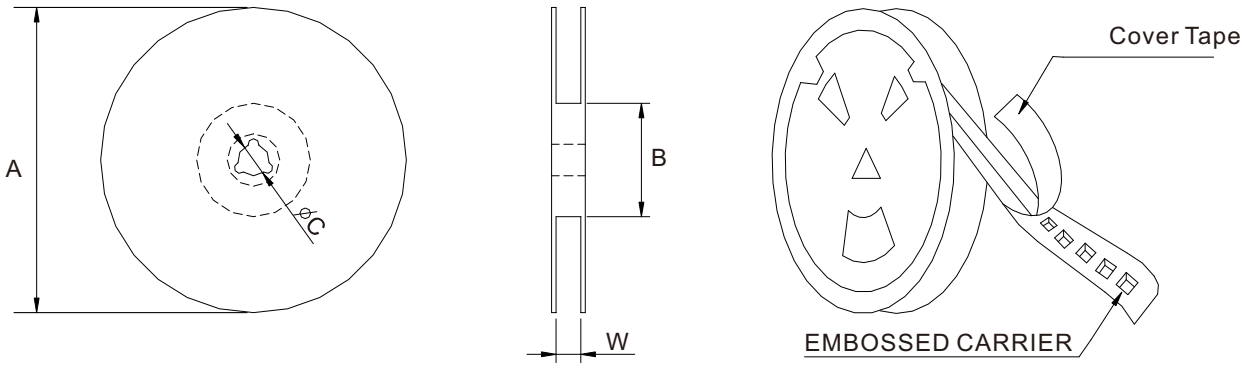

Unit: mm

Type	Dimension	QTY Per Reel	A	B	C	W
	Tolerance	PCS	±2.0	±0.5	±0.5	±0.5
HI1265		500	330	97	13	24.8