Mini Molding Power Inductor - HI201610P Series

Meisongbei

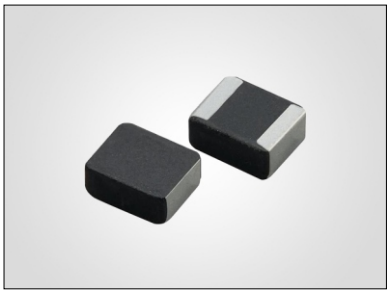

Features

- High Saturation current
- Low DCR to achieve high conversion efficiency
- Low profile: 2.0mmx1.6mmx1.0mm
- Magnetically shielded structure

General Specifications

- Storage temp range: -50°C to +125°C
- Operating temp range: -40°C to +125°C

Application

- PAD, Smart phone
- DC/DC converter
- Thin-type power supply module

RoHS COMPLIANT | REACH COMPLIANT | Halogen Free

Dimensions & Configurations (Unit:mm)

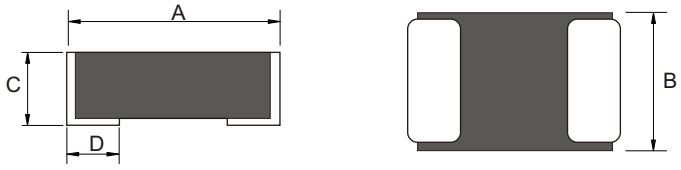

Recommended Layout

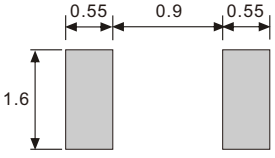

Type	A	B	C	D
HI201610P	2.0±0.2	1.6±0.2	1.0Max	0.5±0.3

Electrical Characteristics For HI201610P Series

Part Number	Inductance L0 [uH] (±20%) @0A	DCR [mΩ]		Heat Rating Current (Irms) [A]		Saturation Current (Isat) [A]	
		(Typ.)	(Max.)	(Typ.)	(Max.)	(Typ.)	(Max.)
HI201610P-R24M	0.24	17	21	5.0	4.50	5.6	5.05
HI201610P-R33M	0.33	24	29	4.1	3.69	5.0	4.50
HI201610P-R47M	0.47	33	40	3.5	3.15	4.4	4.00
HI201610P-R68M	0.68	41	49	3.4	3.06	3.7	3.33
HI201610P-1R0M	1.0	60	69	2.6	2.26	2.9	2.61
HI201610P-1R5M	1.5	114	137	2.0	1.81	2.5	2.25
HI201610P-2R2M	2.2	135	150	1.7	1.50	1.9	1.71

- Inductance tested at 1MHz
- Heat Rating Current (Irms): Current that cause the temperature 40°C rise from 25°C
- Saturation Current (Isat): DC current at which the inductance drops 30% from its value without current

Tape & Reel Specifications:

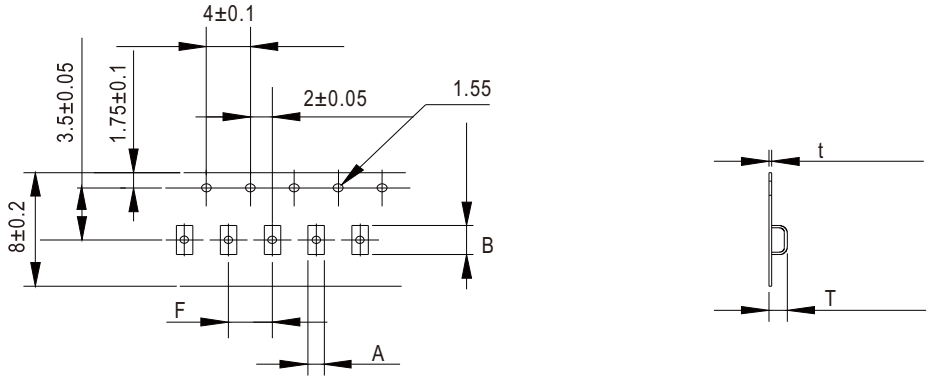

Unit: mm

Type	Dimension	A	B	F	T	t
	Tolerance	±0.1	±0.1	±0.1	±0.1	±0.05
HI201610P		1.80	2.20	4.00	1.15	0.22

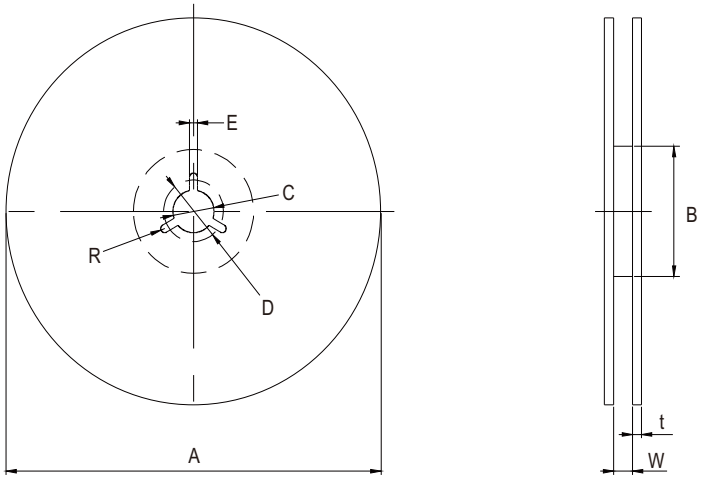

Unit: mm

Type	Dimension	QTY Per Reel	A	B	C	D	E	W	t
	Tolerance	Pcs	±2	±2	±0.8	±0.8	±0.5	±1.5	±0.5
HI201610P		3000	178	60	13	21.0	2	9	2