Mini Molding Power Inductor - HI252012P Series

Meisongbei

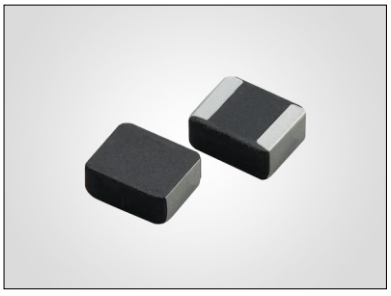

Features

- High Saturation current
- Low profile: 2.5mmx2.0mmx1.2mm
- Magnetically shielded structure
- Rated voltage: 20V DC max.

General Specifications

- Storage temp range: -50°C to +125°C
- Operating temp range: -40°C to +125°C

Application

- PAD, Smart phone
- DC/DC converter
- Thin-type power supply module

RoHS COMPLIANT | REACH COMPLIANT | Halogen Free

Dimensions & Configurations (Unit:mm)

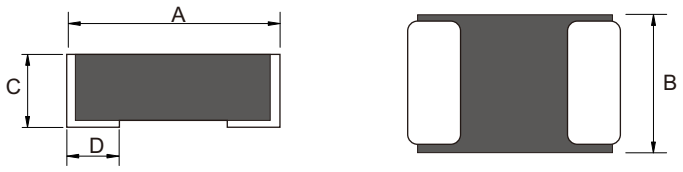

Recommended Layout

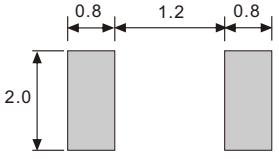

Type	A	B	C	D
HI252012P	2.5±0.2	2.0±0.2	1.2Max	0.6±0.3

Electrical Characteristics For HI252012P Series

Part Number	Inductance L0 [uH] (±20%) @0A	DCR [mΩ]		Heat Rating Current (Irms) [A]		Saturation Current (Isat) [A]	
		(Typ.)	(Max.)	(Typ.)	(Max.)	(Typ.)	(Max.)
HI252012P-R47M	0.47	21	25	4.60	4.18	5.30	4.95
HI252012P-R68M	0.68	29	35	3.70	3.36	5.00	4.63
HI252012P-1R0M	1.0	41	49	3.50	3.18	4.40	4.04
HI252012P-1R5M	1.5	64	77	2.50	2.27	3.20	2.91
HI252012P-2R2M	2.2	85	98	2.27	2.06	3.00	2.73
HI252012P-4R7M	4.7	196	235	1.55	1.40	1.90	1.58

- Inductance tested at 1MHz, 1.0Vrms, 0.0Adc
- Heat Rating Current (Irms): Current that cause the temperature 40°C rise from 25°C
- Saturation Current (Isat): DC current at which the inductance drops 30% from its value without current

Tape & Reel Specifications:

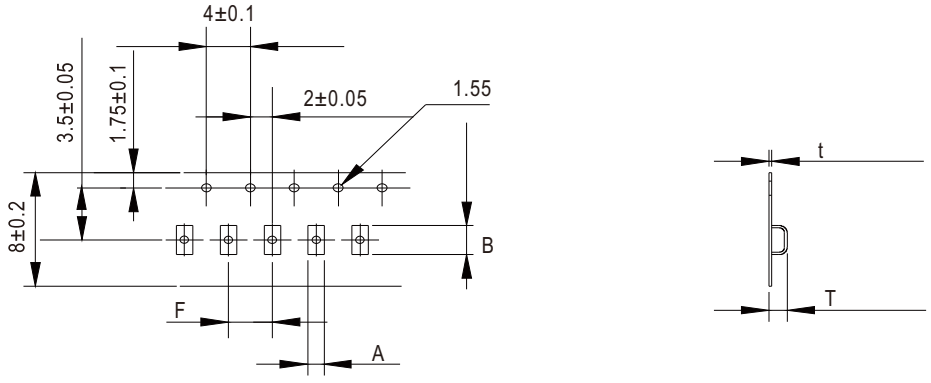

Unit: mm

Type	Dimension	A	B	F	T	t
	Tolerance	±0.1	±0.1	±0.1	±0.05	±0.05
HI252012P		2.25	2.80	4.00	1.35	0.22

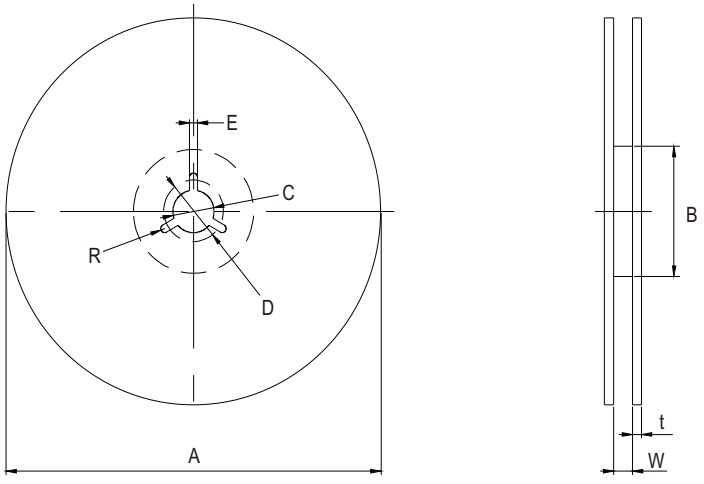

Unit: mm

Type	Dimension	QTY Per Reel	A	B	C	D	E	W	t
	Tolerance	Pcs	±2	±2	±0.8	±0.8	±0.5	±1.5	±0.5
HI252012P		3000	178	60	13	21.0	2	10	2