# SMD Balun / Transformers for Frequency Mixer - MB4F-6170DB Series

Meisongbei

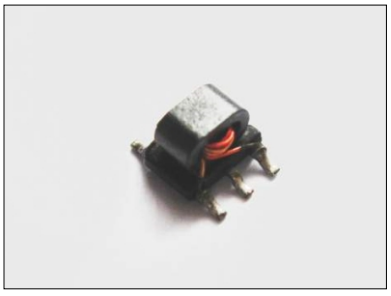

## Feature and application

- Surface Mount.
- Available on tape and reel.
- Ideally suited for High volume CATV/Broadband applications.

RoHS COMPLIANT | REACH COMPLIANT | Halogen Free

## Dimensions(mm)

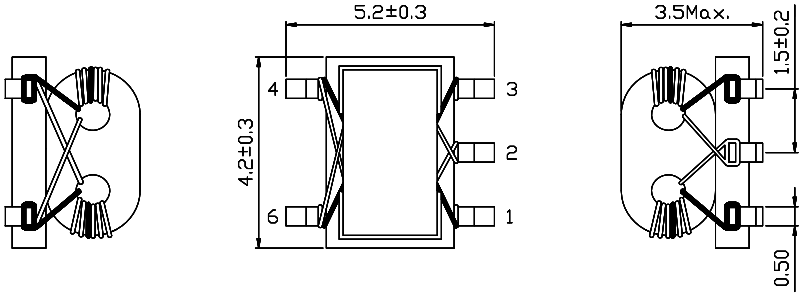


## Pin Connection

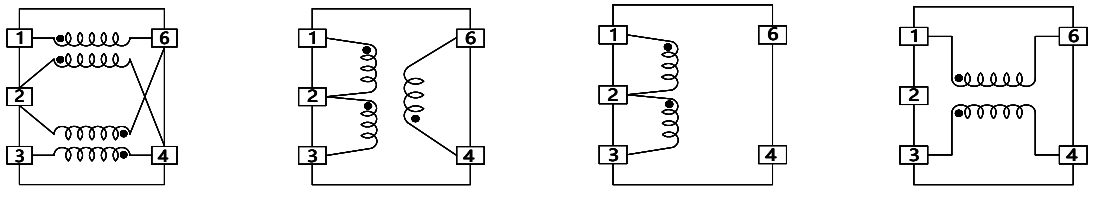

Fig.A Fig. B Fig. C Fig. D

## Electrical characteristics(at 20°C)

| Part No. | Turns | Frequency Range (MHz) | Insertion Loss(dB) [Max.] | Fig. |
|---|---|---|---|---|
| MB4F-617DB-1007A | 2.5 | 25~2000 | 3.0 | A |
| MB4F-617DB-1009A | 3.5 | 6.0~2000 | 3.0 | A |
| MB4F-617DB-1010A | 4.5 | 2.0~2000 | 3.0 | A |
| MB4F-617DB-1029B | 4 | -- | -- | B |
| MB4F-617DB-1076C | 3 | 50~800 | 6.5 | C |
| MB4F-617DB-1021D | 1.5 | 20~750 | 3.0 | D |
| MB4F-617DB-1022D | 2.5 | 4.5~3300 | 3.0 | D |
| MB4F-617DB-1023D | 3.5 | 2.3~2700 | 3.0 | D |
| MB4F-617DB-1024D | 4.5 | 1.5~2400 | 3.0 | D |

- Measuring equipment:
  Insertion Loss :HP8711A or equivalent

## Tape & Reel Specifications:

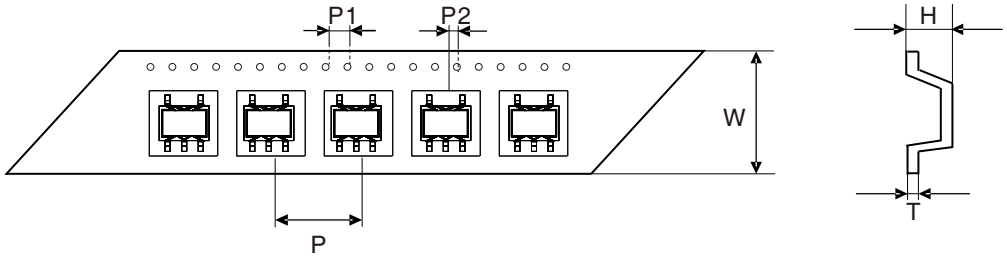


Unit: mm

| Type | Dimension | W | P | P1 | P2 | H | T |
|---|---|---|---|---|---|---|---|
| | Tolerance | ±0.3 | ±0.1 | ±0.1 | ±0.1 | ±0.15 | ±0.05 |
| MB4F | | 16.0 | 12.0 | 4.00 | 2.00 | 4.80 | 0.35 |

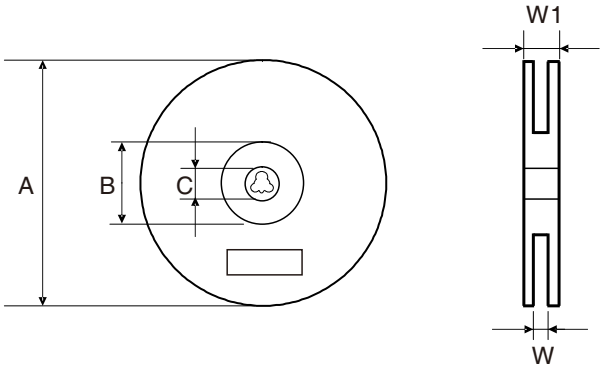


Unit: mm

| Type | Dimension | QTY Per Reel | A | B | C | W | W1 |
|---|---|---|---|---|---|---|---|
| | Tolerance | Pcs | ±2.0 | min | ±0.5 | ±0.5 | ±3.0 |
| MB4F | | 1000 | 330 | 100 | 13.5 | 16.5 | 21.0 |