SMD Molded Coupled Inductor - MCRI1050 Series

Meisongbei



Features

- Shielded Construction
- Composite core material allows high saturation current and compact design
- 1:1 Transformer

- Inductance tested at 100kHz, 1.0Vrms
- Irms: DC current cause temp 40°C rise from 25°C
- Isat: DCCurrent cause L drop 30% max.

General Specifications

- Storage temp range: -40°C to +125°C
- Operating temp range: -40°C to +125°C

RoHS COMPLIANT | REACH COMPLIANT | Halogen Free

Shape and Dimensions (Unit:mm)

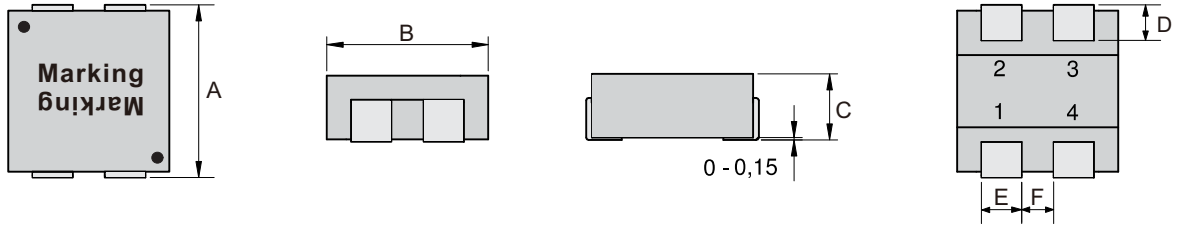

Type	A	B	C	D	E	F
MCRI1050	11.5 Max.	10.2±0.2	5.0 Max.	2.2±0.3	2.5±0.5	1.9±0.2

Recommended Layout

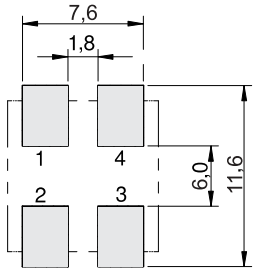

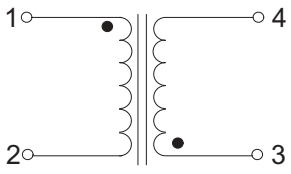

Schematic 1:1

Electrical Characteristics For MCRI1050 Series @ 25°C

Part Number	Inductance (µH) L(1-2)=L(3-4)	DCR (mΩ) Max. R(1-2)=R(3-4)	Irms (A) Typ.	Isat (A) Typ.
MCRI1050-3R3M	3.3±20%	22	7	32
MCRI1050-4R7M	4.7±20%	32	6	30
MCRI1050-5R6M	5.6±20%	45	5	23
MCRI1050-150M	15±20%	95	3	13
MCRI1050-220M	22±20%	115	2.5	10

Tape & Reel Specifications:

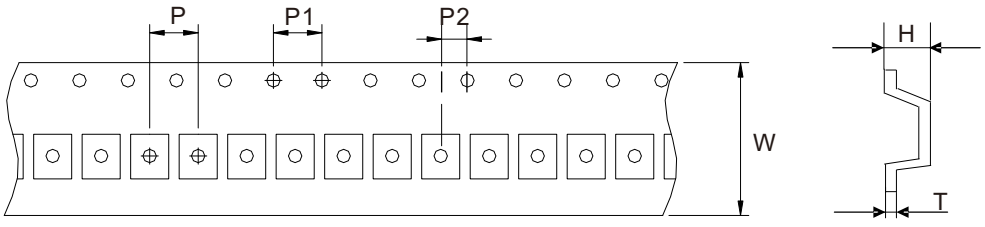

Unit: mm

Type	Dimension	W	P	P1	P2	H	T
	Tolerance	±0.3	±0.1	±0.1	±0.1	±0.15	±0.05
MCRI1050		24.0	16.0	4.0	2.0	5.20	0.35

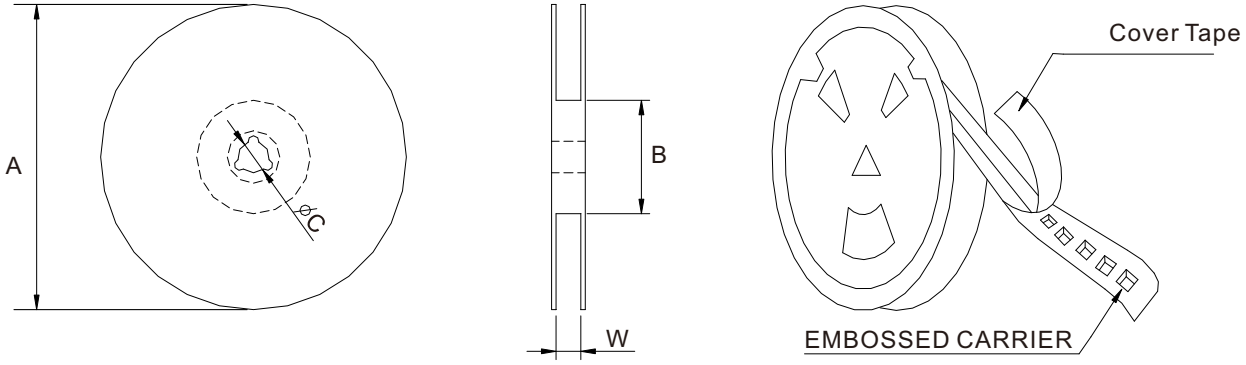

Unit: mm

Type	Dimension	QTY Per Reel	A	B	C	W
	Tolerance	PCS	±2.0	±0.5	±0.5	±0.5
MCRI1050		800	330	97	13	24.8