SMD Molded Coupled Inductor - MCRI1090 Series

Meisongbei



Features

- Shielded Construction
- Composite core material allows high saturation current and compact design
- 1:1 Transformer

- Inductance tested at 100kHz, 1.0Vrms
- Irms: DC current cause temp 40°C rise from 25°C
- Isat: DCCurrent cause L drop 30% max.

General Specifications

- Storage temp range: -40°C to +125°C
- Operating temp range: -40°C to +125°C

RoHS COMPLIANT | REACH COMPLIANT | Halogen Free

Shape and Dimensions (Unit:mm)

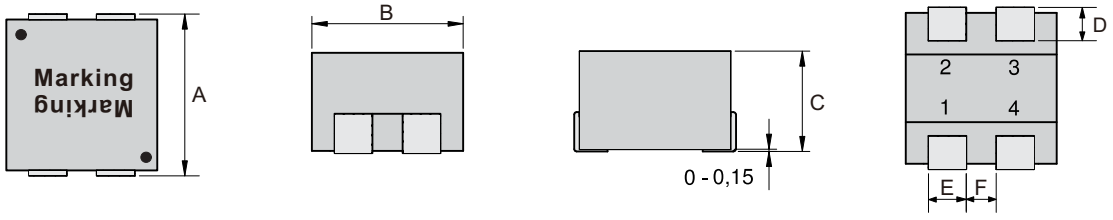

Type	A	B	C	D	E	F
MCRI1090	11.5 Max.	10.2±0.2	9.0 Max.	2.2±0.3	2.5±0.5	1.9±0.2

Recommended Layout

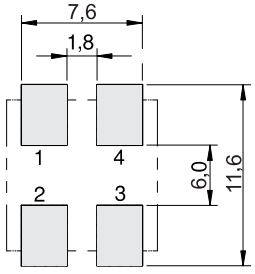

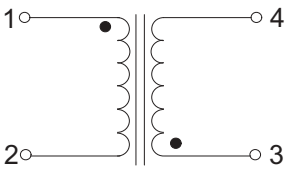

Schematic 1:1

Electrical Characteristics For MCRI1090 Series @ 25°C

Part Number	Inductance (uH) L(1-2)=L(3-4)	DCR (mΩ) Max. R(1-2)=R(3-4)	Irms (A) Max.	Isat (A) Max.
MCRI1090-1R0M	1.0±20%	5.6	17	43.5
MCRI1090-1R5M	1.5±20%	9.4	12.5	34
MCRI1090-2R2M	2.2±20%	12.5	11.5	29.5
MCRI1090-3R3M	3.3±20%	26	7.5	28.2
MCRI1090-4R7M	4.7±20%	40	7	24.2
MCRI1090-6R8M	6.8±20%	51.5	6.5	21.2
MCRI1090-8R2M	8.2±20%	63	6	18.5
MCRI1090-100M	10±20%	69	5.5	17
MCRI1090-150M	15±20%	87	5	9.5
MCRI1090-220M	22±20%	106	4	8.1
MCRI1090-330M	33±20%	145	3.5	6.8
MCRI1090-470M	47±20%	240	2.3	6

Tape & Reel Specifications:

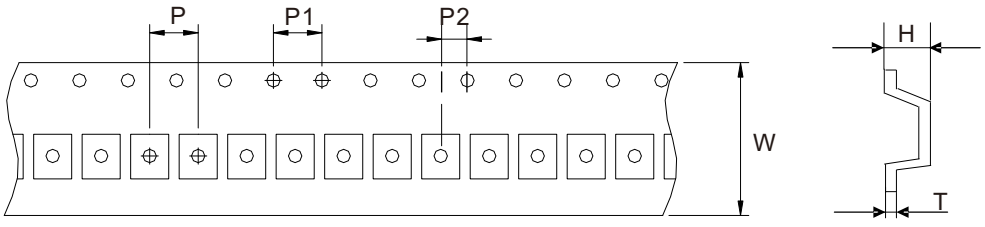

Unit: mm

Type	Dimension	W	P	P1	P2	H	T
	Tolerance	±0.3	±0.1	±0.1	±0.1	±0.15	±0.05
MCRI1090		24.0	16.0	4.0	2.0	9.20	0.35

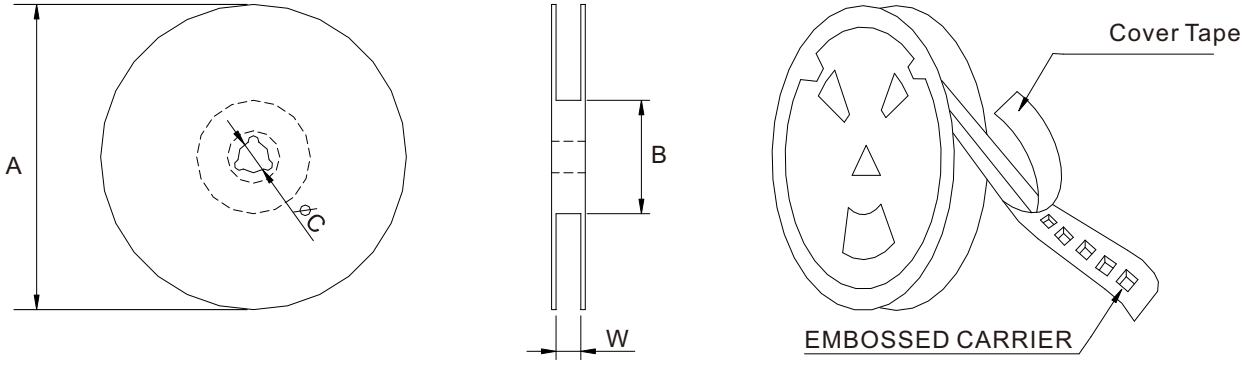

Unit: mm

Type	Dimension	QTY Per Reel	A	B	C	W
	Tolerance	PCS	±2.0	±0.5	±0.5	±0.5
MCRI1090		300	330	97	13	24.8