# SMD Balun / Common Mode Chokes - MDB1065 Series

Meisongbei

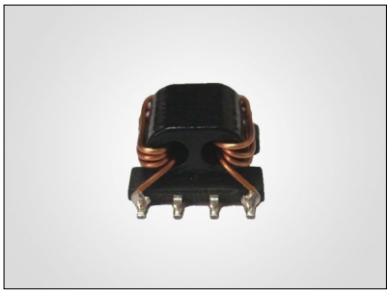

## Feature and application

- SMD common mode choke
- Ideally used in EMC and balun conveter, CATV signal transfer
- RoHS Compliance.

RoHS COMPLIANT | REACH COMPLIANT | Halogen Free

## Dimensions(mm)

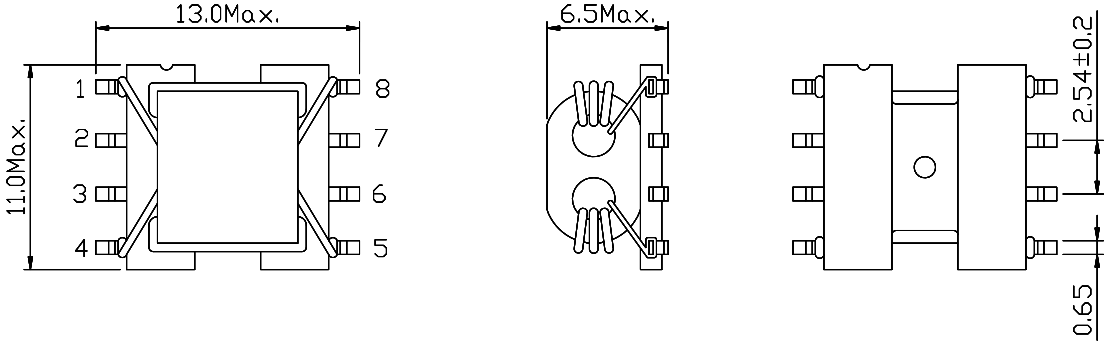


## Connection Pins

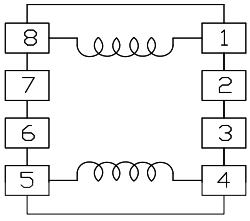


## Land Patterns(mm)

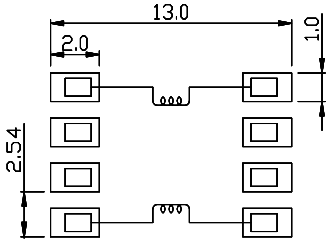


## Electrical characteristics(at 20°C)

| Part No. | Impedance (Ω) [Min.] @100MHz | Inductance (uH) (1-8=4-5) | D.C.R (mΩ) [Max.] | Hi-pot (Coil-Core) |
|---|---|---|---|---|
| MDB1065-651 | 650 | 2.4±40% | 15 | AC200V/5mA/1Sec |

- Measuring equipment: HP4191A, TH2819A
- Inductance test condition: 1kHz,0.25V
- Insulation test (Coil-Coil): 100MΩ Min @ DC 80V

## Tape & Reel Specifications:

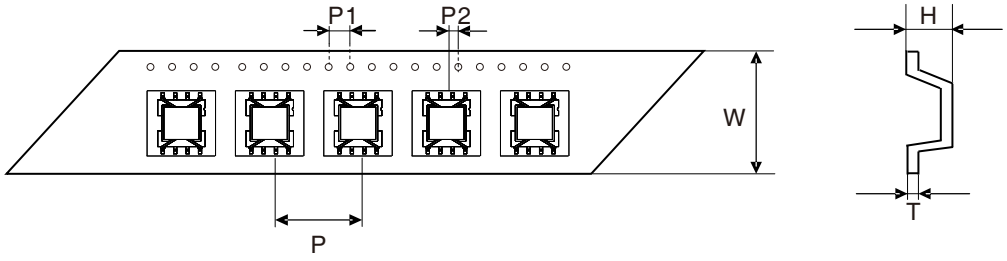


Unit: mm

| Type | Dimension | W | P | P1 | P2 | H | T |
|---|---|---|---|---|---|---|---|
| | Tolerance | ±0.3 | ±0.1 | ±0.1 | ±0.1 | ±0.15 | ±0.05 |
| MDB1065 | | 24.0 | 16.0 | 4.00 | 2.00 | 6.00 | 0.35 |

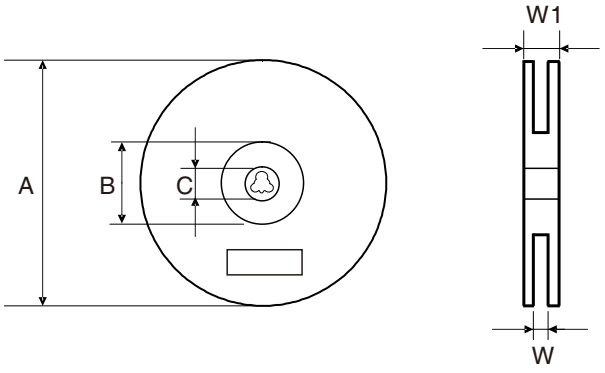


Unit: mm

| Type | Dimension | QTY Per Reel | A | B | C | W | W1 |
|---|---|---|---|---|---|---|---|
| | Tolerance | Pcs | ±2.0 | min | ±0.5 | ±0.5 | ±3.0 |
| MDB1065 | | 500 | 330 | 100 | 13.5 | 24.0 | 28.6 |