100/1000 Base T Gigabit Single Port Transformer

Meisongbei

- LL: 0.5uH Max @ 100KHz, 200mV
- DCR: 1.4Ω Max
- Cw/w: 25PF TYP @ 100KHz, 200mV
- Operating Temp:-40°C to +85°C

Electrical Specifications @25°C

Part Number	OCL(uH Min) @ 100kHz, 200mV With 8mA DC Bias	Turns Ratio chip: cable (±5%)	Insertion Loss (dB Max)	Return Loss (dB Min)				
			1-100MHz	1-30MHz	40MHz	50MHz	60-80MHz	100MHz
MGSC-2401I	350	1CT:1CT(TX)/1CT:1CT(RX)	-1.0 Max	-18	-14.4	-13.1	-12	-10

Electrical Specifications @25°C

Part Number	Common Mode Rejection (dB Min)			Cross Talk (dB Min)			Isolation HI-POT (Vrms) 60S
	30MHz	60MHz	100MHz	30MHz	60MHz	100MHz	
MGSC-2401I	-40	-35	-30	-45	-40	-35	1500

MECHANICAL

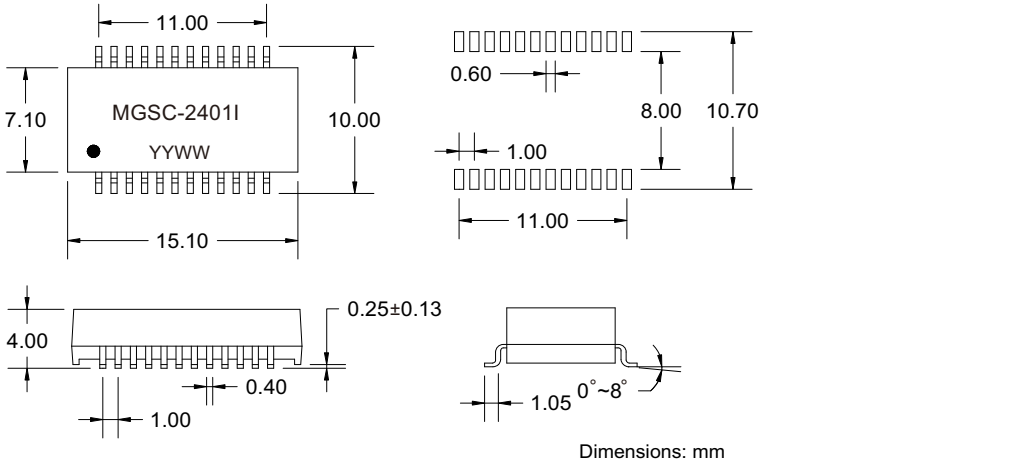

Dimensions: mm
Unless otherwise specified, all tolerances are±0.25

SCHEMATICS

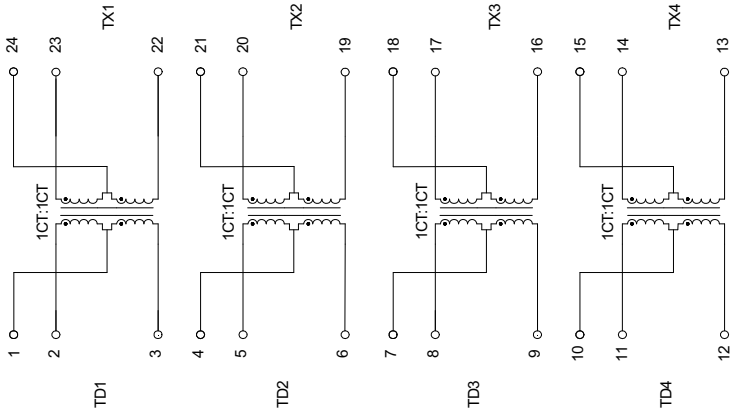

PACKAGE

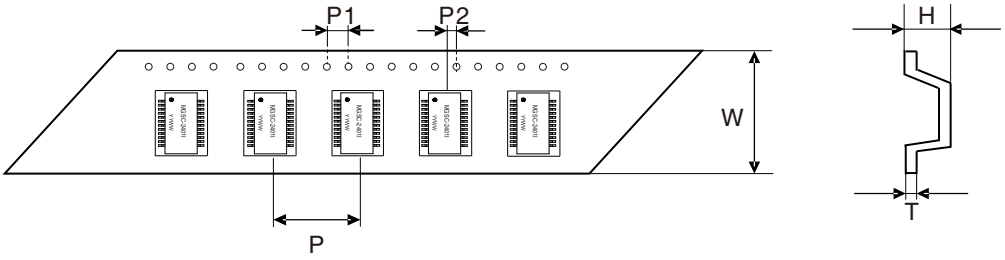

Unit: mm

Type	Dimension	W	P	P1	P2	H	T
	Tolerance	±0.2	±0.1	±0.2	±0.05	±0.01	±0.05
MGSC-2401I		24.0	16.0	4.00	2.00	4.50	0.40

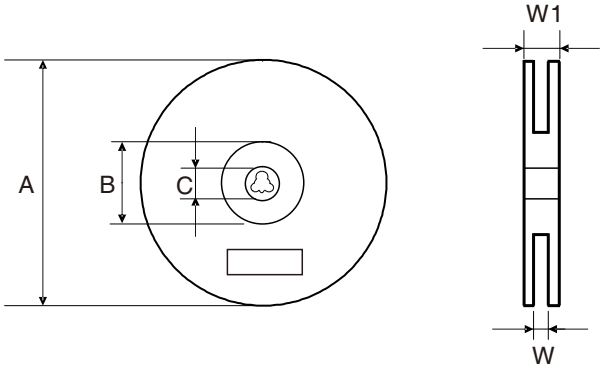

Unit: mm

Type	Dimension	QTY Per Reel	A	B	C	W	W1
	Tolerance	Pcs	±2.0	min	±0.5	±0.3	±3.0
MGSC-2401I		800	330	100	13	24.0	30.0

Note: 1. One reel: 800pcs
2. One carton:6400pcs