100/1000 Base T Gigabit Dual Port Transformer

Meisongbei

- Polarity: 2-47, 5-44, 8-41, 11-38, 14-35, 17-32, 20-29, 23-26 In-Phase
- LL: 0.5uH Max @ 100KHz, 200mV
- DCR: 0.9Ω Max
- Cw/w: 25PF TYP @ 100KHz, 200mV
- Operating Temp: 0°C to +70°C

Electrical Specifications @25°C

Part Number	OCL(uH Min) @ 100kHz, 200mV	Turns Ratio chip: cable (±5%)	Insertion Loss (dB Max)	Return Loss (dB Min)			
	With 8mA DC Bias		1-100MHz	1-30MHz	40MHz	50MHz	60-80MHz
MGTA-4801S	350	1CT:1CT	-1.0	-16	-14.4	-13.1	-12

Electrical Specifications @25°C

Part Number	Common Mode Rejection (dB Min)			Cross Talk (dB Min)			Isolation HI-POT (Vrms) 60S
	30MHz	60MHz	80-100MHz	30MHz	60MHz	100MHz	
MGTA-4801S	-40	-35	-30	-40	-35	-30	1500

MECHANICAL

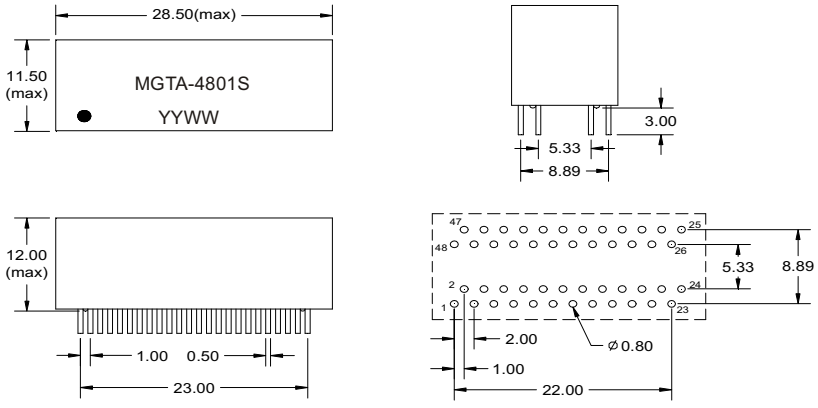

Dimensions: mm
Unless otherwise specified, all tolerances are±0.25

SCHEMATICS

