100/1000 Base T Gigabit Quad Port Transformer

Meisongbei

- LL: 0.5uH Max @ 100KHz, 200mV
- DCR: 1.4Ω Max
- Operating Temp: 0°C to +70°C

Electrical Specifications @25°C

Part Number	OCL(uH Min) @ 100kHz, 0.2V	Turns Ratio chip: cable (±3%)	Insertion Loss (dB Max)	Return Loss (dB Min)				
	With 8mA DC Bias		1-100MHz	1-30MHz	40MHz	50MHz	60-80MHz	100MHz
MGTA-8801S	350	1CT:1CT	-1.0	-18	-14.4	-13.1	-12	-10

Electrical Specifications @25°C

Part Number	Common Mode Rejection (dB Min)			Cross Talk (dB Min)	Isolation HI-POT (Vrms)
	0.3-30MHz	60MHz	100MHz	1-100Hz	
MGTA-8801S	-40	-35	-30	-30	1500

MECHANICAL

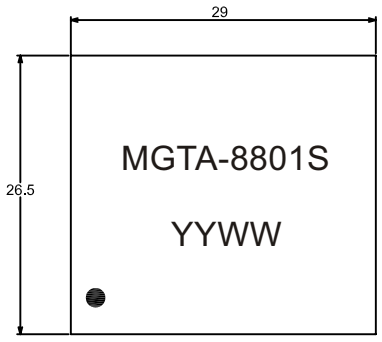

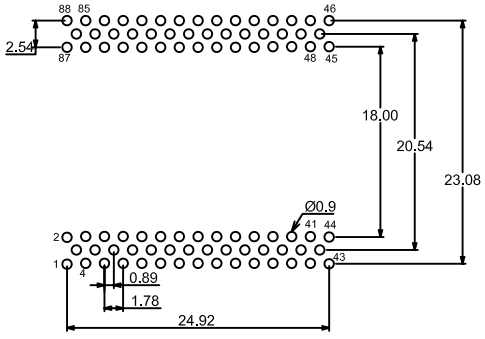

SUGGESTED PAD LAYOUT

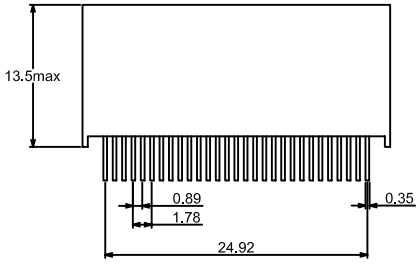

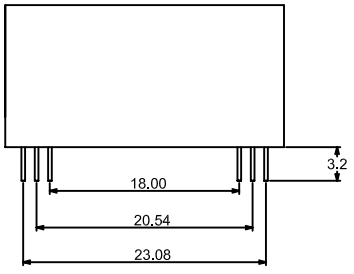

Dimensions: mm
Unless otherwise specified, all tolerances are±0.25

SCHEMATICS

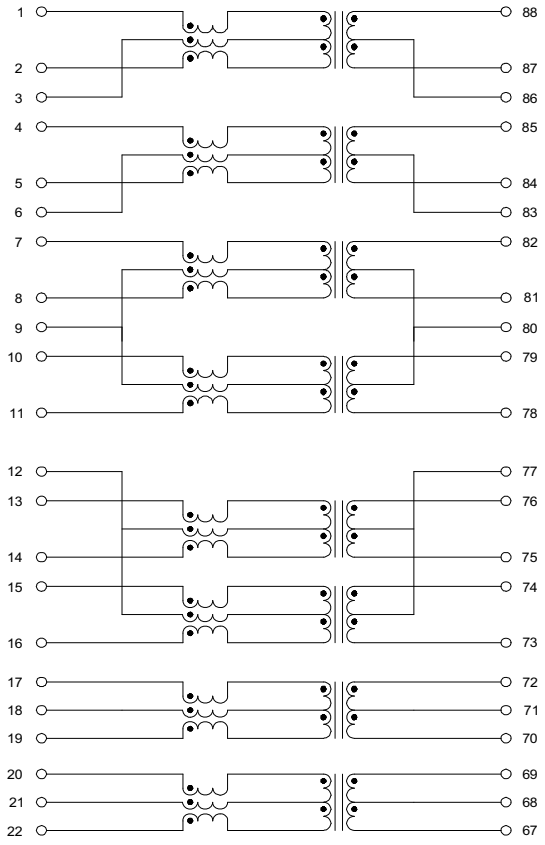
1
2
3
4
5
6
7
8
9
10
11
12
13
14
15
16
17
18
19
20
21
22
88
87
86
85
84
83
82
81
80
79
78
77
76
75
74
73
72
71
70
69
68
67

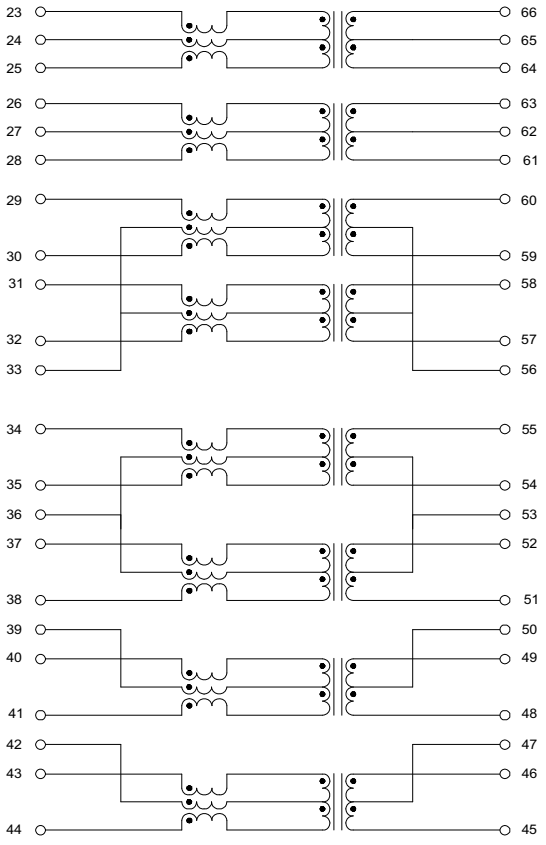
23
24
25
26
27
28
29
30
31
32
33
34
35
36
37
38
39
40
41
42
43
44
66
65
64
63
62
61
60
59
58
57
56
55
54
53
52
51
50
49
48
47
46
45