High Current Chokes - MIRD06 Series

Meisongbei



Features

- Very high current capacity
- Epoxy coated ferrite bobbin core
- Fixed lead spacing

Applications

- Electronic appliance
- Power supplies
- TRIAC/SCR Control Circuits

General Specifications

- Storage temp range: -55°C to +105°C
- Operating temp range: -40°C to +105°C
- Moisture Sensitivity Level(MSL): 1

RoHS COMPLIANT | REACH COMPLIANT | Halogen Free

Dimensions and Electrical Characteristics

Unit: [mm]

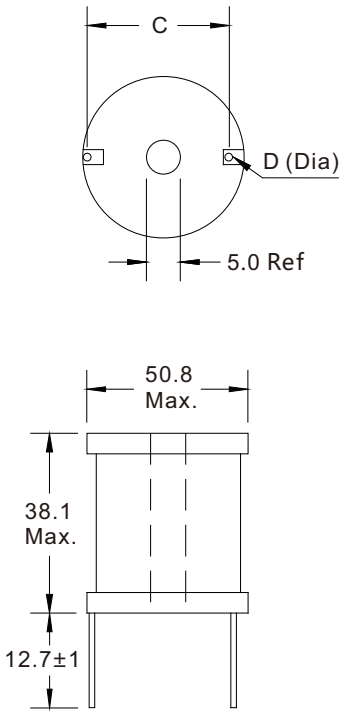

- Inductance tested at 1kHz, 0.25V
- Rated current: cause 50°C temp rise and 10% max inductance drop
- Hi-pot: 2500Vrms terminal to tube 1000Vrms terminal to core

Part Number	Inductance [uH]	DCR (max) [Ω]	Rated Current [A]	Dim. C Approx.	Dim. D Nom.
MIRD06-4R7M	4.7 ±20%	0.002	35.0	35.56	2.60
MIRD06-5R6M	5.6 ±20%	0.002	35.0	35.56	2.60
MIRD06-6R8M	6.8 ±20%	0.003	35.0	35.56	2.60
MIRD06-8R2M	8.2 ±20%	0.003	35.0	35.56	2.60
MIRD06-100K	10 ±10%	0.003	35.0	37.60	2.60
MIRD06-120K	12 ±10%	0.004	35.0	37.60	2.60
MIRD06-150K	15 ±10%	0.004	35.0	37.60	2.60
MIRD06-180K	18 ±10%	0.005	35.0	37.60	2.60
MIRD06-220K	22 ±10%	0.006	35.0	37.60	2.60
MIRD06-270K	27 ±10%	0.006	35.0	37.60	2.60
MIRD06-330K	33 ±10%	0.006	35.0	37.60	2.60
MIRD06-390K	39 ±10%	0.008	35.0	37.60	2.60
MIRD06-470K	47 ±10%	0.008	35.0	37.60	2.60
MIRD06-560K	56 ±10%	0.009	35.0	37.60	2.60
MIRD06-680K	68 ±10%	0.009	35.0	37.60	2.60
MIRD06-820K	82 ±10%	0.010	35.0	37.60	2.60
MIRD06-101K	100 ±10%	0.014	27.0	38.86	2.40
MIRD06-121K	120 ±10%	0.015	27.0	38.86	2.40
MIRD06-151K	150 ±10%	0.023	21.0	37.85	2.10
MIRD06-181K	180 ±10%	0.025	21.0	37.85	2.10
MIRD06-221K	220 ±10%	0.028	21.0	37.85	2.10
MIRD06-271K	270 ±10%	0.030	21.0	37.85	2.10
MIRD06-331K	330 ±10%	0.040	17.0	33.27	1.90
MIRD06-391K	390 ±10%	0.055	13.5	33.27	1.70
MIRD06-471K	470 ±10%	0.061	13.5	33.27	1.70
MIRD06-561K	560 ±10%	0.068	13.5	35.56	1.70
MIRD06-681K	680 ±10%	0.094	11.4	36.07	1.50
MIRD06-821K	820 ±10%	0.104	11.4	36.07	1.50
MIRD06-102K	1000 ±10%	0.143	9.0	34.55	1.40
MIRD06-122K	1200 ±10%	0.156	9.0	34.55	1.40
MIRD06-152K	1500 ±10%	0.219	7.2	33.27	1.20
MIRD06-182K	1800 ±10%	0.241	7.2	33.27	1.20
MIRD06-222K	2200 ±10%	0.270	7.2	35.56	1.20
MIRD06-272K	2700 ±10%	0.364	5.5	34.54	1.10
MIRD06-332K	3300 ±10%	0.498	4.5	31.50	1.00
MIRD06-392K	3900 ±10%	0.548	4.5	33.53	1.00
MIRD06-472K	4700 ±10%	0.608	4.5	33.53	1.00
MIRD06-562K	5600 ±10%	0.671	4.5	34.54	1.00
MIRD06-682K	6800 ±10%	0.750	4.5	35.56	1.00
MIRD06-822K	8200 ±10%	1.030	4.0	36.83	0.90
MIRD06-103K	10000 ±10%	1.160	4.0	36.83	0.90
MIRD06-123K	12000 ±10%	1.540	2.8	35.56	0.80
MIRD06-153K	15000 ±10%	1.750	2.8	35.56	0.70
MIRD06-153K	18000 ±10%	1.940	2.8	36.83	0.70
MIRD06-223K	22000 ±10%	2.740	2.0	34.80	0.70
MIRD06-273K	27000 ±10%	3.710	1.7	34.80	0.63
MIRD06-333K	33000 ±10%	4.160	1.7	34.80	0.63
MIRD06-393K	39000 ±10%	5.560	1.4	34.30	0.63