SMD Common Mode Line Filter - MSCB1085B Series

Meisongbei

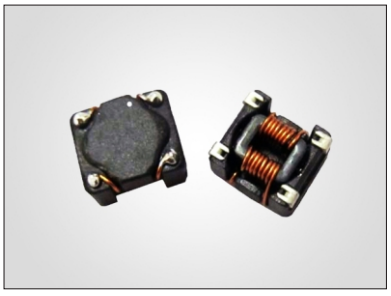

Features

- Dual-choke configuration.
- Small compact design
- Flammability corresponding to UL 94 V-0
- Rated Voltage: 80 VDC (42 VAC)
- Temperature range: -40°C to +125°C

Applications

- Current compensated choke for data and signal lines
- Power supply system
- Signal and sensor lines
- Suppression of common mode noise

RoHS COMPLIANT | REACH COMPLIANT | Halogen Free

Dimensions & Configurations (Unit:mm)

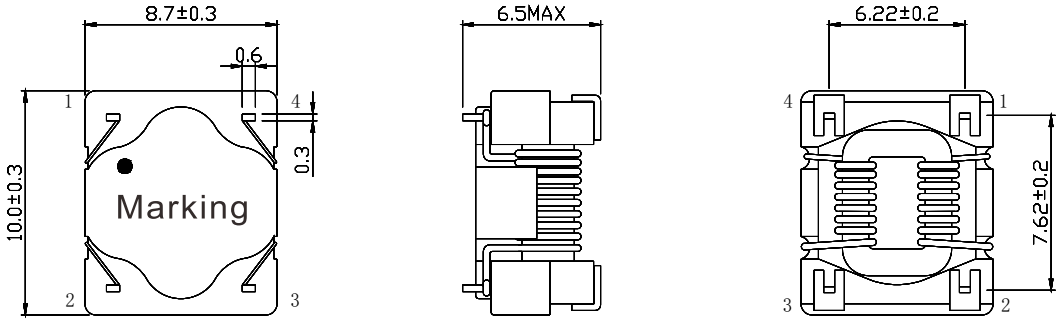

Land Patterns(mm)

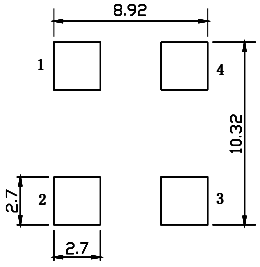

Schematic

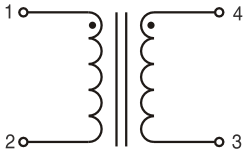

Electrical Characteristics For MSCB1085 Series

Part Number	Inductance [uH]	Impedance[Ω] max	DCR (max) [mΩ]	IDC [A]
MSCB1085-121	120 ±40%	460	25	2.5
MSCB1085-221	220 ±40%	780	32	2.2
MSCB1085-251	250 ±40%	970	35	2.0
MSCB1085-471	470 ±40%	1750	65	1.6
MSCB1085-102	1000 ±40%	3600	180	0.95
MSCB1085-332	3300 ±40%	8900	360	0.65

- Inductance Testing:100KHz 0.1V
- IDC Max: 40°C rise max.

Tape & Reel Specifications:

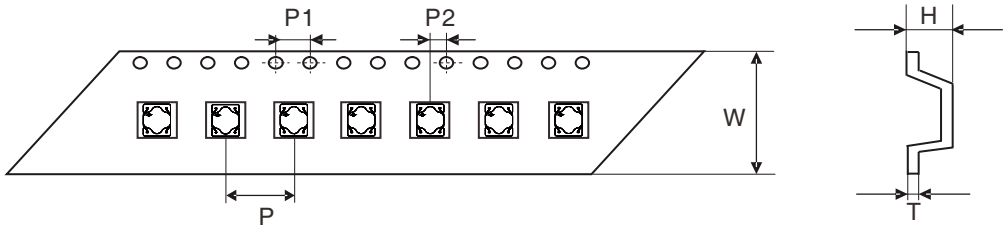

Unit: mm

Type	Dimension	W	P	P1	P2	H	T
	Tolerance	±0.2	±0.1	±0.2	±0.05	±0.1	±0.05
MSCB1085		24.0	16.0	4.00	2.00	8.50	0.50

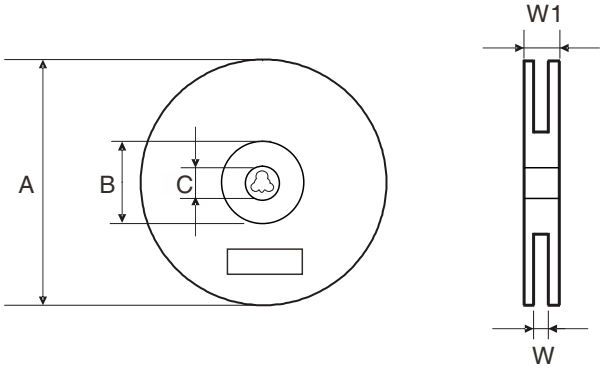

Unit: mm

Type	Dimension	QTY Per Reel	A	B	C	W	W1
	Tolerance	PCS	±2.0	min	±0.5	±0.3	±3.0
MSCB1085		800	330	100	13	24.5	29.1