SMT Shielded Power Inductors MSRH73P-129P Series

Meisongbei



Features

- Magnetically Shielded Structure
- Plastic base improves the mechanical stability and efficiency

Application

- Communication equipment
- DC/DC conversion
- DC switching power supply circuit

General Specifications

- Storage temp range: -40°C to +125°C
- Operating temp range: -40°C to +125°C
- Moisture Sensitivity Level(MSL): 1

RoHS COMPLIANT | REACH COMPLIANT | Halogen Free

Shape and Dimensions (Unit:mm)

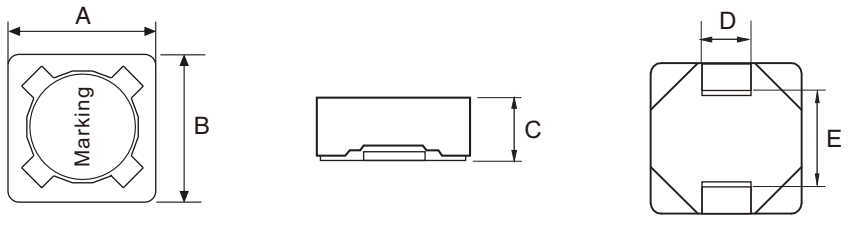

Recommended Layout

Type	A ± 0.3	B ± 0.3	C (max)	D (Ref)	E (Ref)	G	H	L
MSRH73P	7.3	7.3	3.5	2.0	5	4.8	2.2	8
MSRH74P	7.3	7.3	4.5	2.0	5	4.8	2.2	8

Shape and Dimensions (Unit:mm)

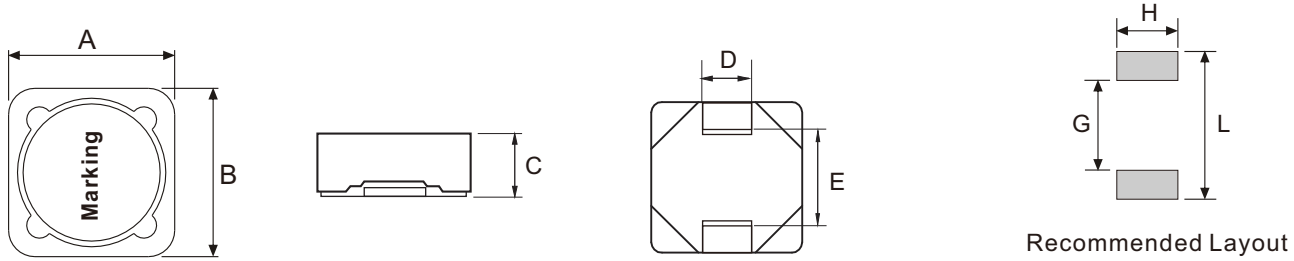

Recommended Layout

Type	A ± 0.3	B ± 0.3	C (max)	D (Ref)	E (Ref)	G	H	L
MSRH124P	12.0	12.0	4.8	5.0	7.0	6.5	5.4	12.5
MSRH125P	12.0	12.0	6.2	5.0	7.0	6.5	5.4	12.5
MSRH127P	12.0	12.0	8.0	5.0	7.0	6.5	5.4	12.5
MSRH129P	12.0	12.0	10.0	5.0	7.0	6.5	5.4	12.5

MSRH73P SMT Shielded Power Inductors

Meisongbei

Electrical Characteristics For MSRH73 Series

Part Number	Inductance [uH]	Test Freq [KHz]	DCR(max) [Ω]	Rated Current Idc [A]
MSRH73P-1R0N	1.0 ±30%	100	0.012	5.50
MSRH73P-2R2N	2.2 ±30%	100	0.035	2.50
MSRH73P-3R3N	3.3 ±30%	100	0.038	2.00
MSRH73P-4R7N	4.7 ±30%	100	0.040	1.82
MSRH73P-5R6N	5.6 ±30%	100	0.057	1.82
MSRH73P-6R8N	6.8 ±30%	100	0.058	1.70
MSRH73P-100M	10 ±20%	100	0.072	1.68
MSRH73P-120M	12 ±20%	100	0.098	1.52
MSRH73P-150M	15 ±20%	100	0.130	1.33
MSRH73P-180M	18 ±20%	100	0.140	1.20
MSRH73P-220M	22 ±20%	100	0.190	1.07
MSRH73P-270M	27 ±20%	100	0.210	0.96
MSRH73P-330M	33 ±20%	100	0.240	0.91
MSRH73P-390M	39 ±20%	100	0.320	0.77
MSRH73P-470M	47 ±20%	100	0.360	0.76
MSRH73P-560M	56 ±20%	100	0.470	0.68
MSRH73P-680M	68 ±20%	100	0.520	0.61
MSRH73P-820M	82 ±20%	100	0.690	0.57
MSRH73P-101M	100 ±20%	100	0.790	0.50
MSRH73P-121M	120 ±20%	100	0.890	0.49
MSRH73P-151M	150 ±20%	100	1.270	0.43
MSRH73P-181M	180 ±20%	100	1.450	0.39
MSRH73P-221M	220 ±20%	100	1.650	0.35
MSRH73P-271M	270 ±20%	100	2.310	0.32
MSRH73P-331M	330 ±20%	100	2.620	0.28
MSRH73P-391M	390 ±20%	100	2.940	0.26
MSRH73P-471M	470 ±20%	100	4.180	0.24
MSRH73P-561M	560 ±20%	100	4.670	0.22
MSRH73P-681M	680 ±20%	100	5.730	0.19
MSRH73P-102M	1000 ±20%	1	9.440	0.16

MSRH74P SMT Shielded Power Inductors

Meisongbei

Electrical Characteristics For MSRH74 Series

Part Number	Inductance [uH]	Test Freq [KHz]	DCR(max) [Ω]	Rated Current Idc [A]
MSRH74P-1R0N	1.0 ±30%	100	0.022	6.00
MSRH74P-2R2N	2.2 ±30%	100	0.030	3.00
MSRH74P-3R3N	3.3 ±30%	100	0.035	2.80
MSRH74P-4R7N	4.7 ±30%	100	0.040	2.50
MSRH74P-6R8N	6.8 ±30%	100	0.050	2.10
MSRH74P-100M	10 ±20%	100	0.049	1.84
MSRH74P-120M	12 ±20%	100	0.058	1.71
MSRH74P-150M	15 ±20%	100	0.081	1.47
MSRH74P-180M	18 ±20%	100	0.091	1.31
MSRH74P-220M	22 ±20%	100	0.110	1.23
MSRH74P-270M	27 ±20%	100	0.150	1.12
MSRH74P-330M	33 ±20%	100	0.170	0.96
MSRH74P-390M	39 ±20%	100	0.230	0.91
MSRH74P-470M	47 ±20%	100	0.260	0.88
MSRH74P-560M	56 ±20%	100	0.350	0.75
MSRH74P-680M	68 ±20%	100	0.380	0.69
MSRH74P-820M	82 ±20%	100	0.430	0.61
MSRH74P-101M	100 ±20%	100	0.610	0.60
MSRH74P-121M	120 ±20%	100	0.660	0.52
MSRH74P-151M	150 ±20%	100	0.880	0.46
MSRH74P-181M	180 ±20%	100	0.980	0.42
MSRH74P-221M	220 ±20%	100	1.170	0.36
MSRH74P-271M	270 ±20%	100	1.640	0.34
MSRH74P-331M	330 ±20%	100	1.860	0.32
MSRH74P-391M	390 ±20%	100	2.850	0.29
MSRH74P-471M	470 ±20%	100	3.010	0.26
MSRH74P-561M	560 ±20%	100	3.620	0.23
MSRH74P-681M	680 ±20%	100	4.630	0.22
MSRH74P-821M	820 ±20%	100	5.200	0.20
MSRH74P-102M	1000 ±20%	1	6.000	0.18

MSRH124P SMT Shielded Power Inductors

Meisongbei

Electrical Characteristics For MSRH124 Series

Part Number	Inductance [uH]	Test Freq [KHz]	DCR(max) [Ω]	Rated Current Idc [A]
MSRH124P-1R0N	1.0 ±30%	100	0.012	7.70
MSRH124P-2R2N	2.2 ±30%	100	0.014	7.50
MSRH124P-3R3N	3.3 ±30%	100	0.015	6.80
MSRH124P-3R9N	3.9 ±30%	100	0.018	6.50
MSRH124P-4R7N	4.7 ±30%	100	0.018	5.70
MSRH124P-6R8N	6.8 ±30%	100	0.023	4.90
MSRH124P-8R2N	8.2 ±30%	100	0.026	4.60
MSRH124P-100M	10 ±20%	100	0.028	4.50
MSRH124P-120M	12 ±20%	100	0.038	4.00
MSRH124P-150M	15 ±20%	100	0.050	3.20
MSRH124P-180M	18 ±20%	100	0.057	3.10
MSRH124P-220M	22 ±20%	100	0.066	2.90
MSRH124P-270M	27 ±20%	100	0.080	2.80
MSRH124P-330M	33 ±20%	100	0.097	2.70
MSRH124P-390M	39 ±20%	100	0.132	2.10
MSRH124P-470M	47 ±20%	100	0.160	1.90
MSRH124P-560M	56 ±20%	100	0.190	1.80
MSRH124P-680M	68 ±20%	100	0.220	1.50
MSRH124P-820M	82 ±20%	100	0.260	1.30
MSRH124P-101M	100 ±20%	100	0.308	1.20
MSRH124P-121M	120 ±20%	100	0.380	1.10
MSRH124P-151M	150 ±20%	100	0.530	0.95
MSRH124P-181M	180 ±20%	100	0.620	0.85
MSRH124P-221M	220 ±20%	100	0.700	0.80
MSRH124P-271M	270 ±20%	100	0.870	0.60
MSRH124P-331M	330 ±20%	100	0.990	0.50
MSRH124P-471M	470 ±20%	100	1.300	0.40

MSRH125P SMT Shielded Power Inductors

Meisongbei

Electrical Characteristics For MSRH125 Series

Part Number	Inductance [uH]	Test Freq [KHz]	DCR(max) [Ω]	Rated Current Idc [A]
MSRH125P-1R0N	1.0 ±30%	100	0.010	8.00
MSRH125P-2R2N	2.2 ±30%	100	0.014	7.80
MSRH125P-3R3N	3.3 ±30%	100	0.017	6.80
MSRH125P-4R7N	4.7 ±30%	100	0.020	5.60
MSRH125P-5R8N	5.8 ±30%	100	0.021	5.20
MSRH125P-8R2N	8.2 ±30%	100	0.025	4.40
MSRH125P-100M	10 ±20%	100	0.025	4.00
MSRH125P-120M	12 ±20%	100	0.027	3.50
MSRH125P-150M	15 ±20%	100	0.030	3.30
MSRH125P-180M	18 ±20%	100	0.034	3.00
MSRH125P-220M	22 ±20%	100	0.036	2.80
MSRH125P-270M	27 ±20%	100	0.051	2.30
MSRH125P-330M	33 ±20%	100	0.057	2.10
MSRH125P-390M	39 ±20%	100	0.068	2.00
MSRH125P-470M	47 ±20%	100	0.075	1.80
MSRH125P-560M	56 ±20%	100	0.110	1.70
MSRH125P-680M	68 ±20%	100	0.120	1.50
MSRH125P-820M	82 ±20%	100	0.140	1.40
MSRH125P-101M	100 ±20%	100	0.160	1.30
MSRH125P-121M	120 ±20%	100	0.170	1.10
MSRH125P-151M	150 ±20%	100	0.230	1.00
MSRH125P-181M	180 ±20%	100	0.290	0.90
MSRH125P-221M	220 ±20%	100	0.400	0.80
MSRH125P-271M	270 ±20%	100	0.460	0.75
MSRH125P-331M	330 ±20%	100	0.510	0.68
MSRH125P-391M	390 ±20%	100	0.690	0.65
MSRH125P-471M	470 ±20%	100	0.770	0.58
MSRH125P-561M	560 ±20%	100	0.860	0.54
MSRH125P-681M	680 ±20%	100	1.200	0.48
MSRH125P-821M	820 ±20%	100	1.340	0.43
MSRH125P-102M	1000 ±20%	1	1.900	0.40

MSRH127P SMT Shielded Power Inductors

Meisongbei

Electrical Characteristics For MSRH127 Series

Part Number	Inductance [uH]	Test Freq [KHz]	DCR(max) [Ω]	Rated Current Idc [A]
MSRH127P-1R0N	1.0 ±30%	100	0.007	9.80
MSRH127P-1R5N	1.5 ±30%	100	0.010	9.00
MSRH127P-2R2N	2.2 ±30%	100	0.012	7.50
MSRH127P-3R3N	3.3 ±30%	100	0.015	7.50
MSRH127P-4R7N	4.7 ±30%	100	0.016	6.80
MSRH127P-5R6N	5.6 ±30%	100	0.018	6.70
MSRH127P-6R8N	6.8 ±30%	100	0.020	6.60
MSRH127P-8R2N	8.2 ±30%	100	0.020	5.90
MSRH127P-100M	10 ±20%	100	0.022	5.40
MSRH127P-120M	12 ±20%	100	0.024	4.90
MSRH127P-150M	15 ±20%	100	0.024	4.50
MSRH127P-180M	18 ±20%	100	0.039	3.90
MSRH127P-220M	22 ±20%	100	0.043	3.60
MSRH127P-270M	27 ±20%	100	0.046	3.40
MSRH127P-330M	33 ±20%	100	0.065	3.00
MSRH127P-390M	39 ±20%	100	0.073	2.75
MSRH127P-470M	47 ±20%	100	0.100	2.50
MSRH127P-560M	56 ±20%	100	0.110	2.35
MSRH127P-680M	68 ±20%	100	0.140	2.10
MSRH127P-820M	82 ±20%	100	0.160	1.95
MSRH127P-101M	100 ±20%	100	0.220	1.70
MSRH127P-121M	120 ±20%	100	0.250	1.60
MSRH127P-151M	150 ±20%	100	0.280	1.42
MSRH127P-181M	180 ±20%	100	0.350	1.30
MSRH127P-221M	220 ±20%	100	0.390	1.16
MSRH127P-271M	270 ±20%	100	0.560	1.06
MSRH127P-331M	330 ±20%	100	0.640	0.95
MSRH127P-391M	390 ±20%	100	0.700	0.88
MSRH127P-471M	470 ±20%	100	0.980	0.79
MSRH127P-561M	560 ±20%	100	1.070	0.73
MSRH127P-681M	680 ±20%	100	1.460	0.67
MSRH127P-821M	820 ±20%	100	1.640	0.60
MSRH127P-102M	1000 ±20%	1	1.820	0.55
MSRH127P-152M	1500 ±20%	1	2.400	0.50
MSRH127P-182M	1800 ±20%	1	2.800	0.40
MSRH127P-222M	2200 ±20%	1	2.950	0.30

MSRH129P SMT Shielded Power Inductors

Meisongbei

Electrical Characteristics For MSRH129 Series

Part Number	Inductance [uH]	Test Freq [KHz]	DCR(max) [mΩ]	Rated Current Idc [A]
MSRH129P-1R0N	1.0 ±30%	100	6	11.00
MSRH129P-1R8N	1.8 ±30%	100	8	10.20
MSRH129P-2R2N	2.2 ±30%	100	9	9.50
MSRH129P-3R3N	3.3 ±30%	100	10	9.00
MSRH129P-4R7N	4.7 ±30%	100	12	8.50
MSRH129P-5R6N	5.6 ±30%	100	14	8.00
MSRH129P-6R8N	6.8 ±30%	100	15	7.90
MSRH129P-8R2N	8.2 ±30%	100	17	7.30
MSRH129P-100M	10 ±20%	100	18	6.50
MSRH129P-120M	12 ±20%	100	22	6.30
MSRH129P-150M	15 ±20%	100	32	5.80
MSRH129P-180M	18 ±20%	100	35	5.50
MSRH129P-220M	22 ±20%	100	38	5.20
MSRH129P-270M	27 ±20%	100	40	5.00
MSRH129P-330M	33 ±20%	100	52	4.40
MSRH129P-390M	39 ±20%	100	66	4.20
MSRH129P-470M	47 ±20%	100	72	3.80
MSRH129P-560M	56 ±20%	100	90	3.40
MSRH129P-680M	68 ±20%	100	102	3.00
MSRH129P-820M	82 ±20%	100	112	2.80
MSRH129P-101M	100 ±20%	100	135	2.50
MSRH129P-121M	120 ±20%	100	170	2.30
MSRH129P-151M	150 ±20%	100	190	2.20
MSRH129P-181M	180 ±20%	100	250	1.90
MSRH129P-221M	220 ±20%	100	315	1.70
MSRH129P-271M	270 ±20%	100	410	1.50
MSRH129P-331M	330 ±20%	100	450	1.40
MSRH129P-391M	390 ±20%	100	600	1.30
MSRH129P-471M	470 ±20%	100	820	1.20
MSRH129P-561M	560 ±20%	100	900	1.10
MSRH129P-681M	680 ±20%	100	1200	1.00
MSRH129P-821M	820 ±20%	100	1320	0.85
MSRH129P-102M	1000 ±20%	1	1350	0.78
MSRH129P-122M	1200 ±20%	1	1400	0.75
MSRH129P-222M	2200 ±20%	1	2260	0.69

- Rated Current (Idc): DC current at which cause a 20% inductance reduction from the initial value or inductor surface temperature to rise by 40°C rise from 25°C

Tape & Reel Specifications:

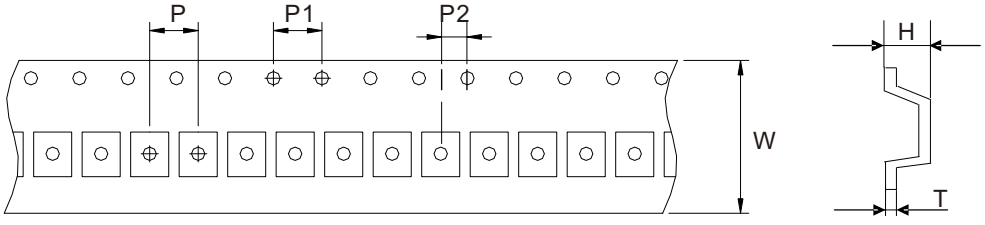

Unit: mm

Type	Dimension	W	P	P1	P2	H	T
	Tolerance	±0.5	±0.3	±0.3	±0.3	±0.3	±0.1
MSRH73P		16.0	12.0	4.0	2.0	3.7	0.35
MSRH74P		16.0	12.0	4.0	2.0	4.7	0.35
MSRH124P		24.0	16.0	4.0	2.0	5.0	0.37
MSRH125P		24.0	16.0	4.0	2.0	6.4	0.38
MSRH127P		24.0	16.0	4.0	2.0	8.2	0.40
MSRH129P		24.0	16.0	4.0	2.0	10.2	0.40

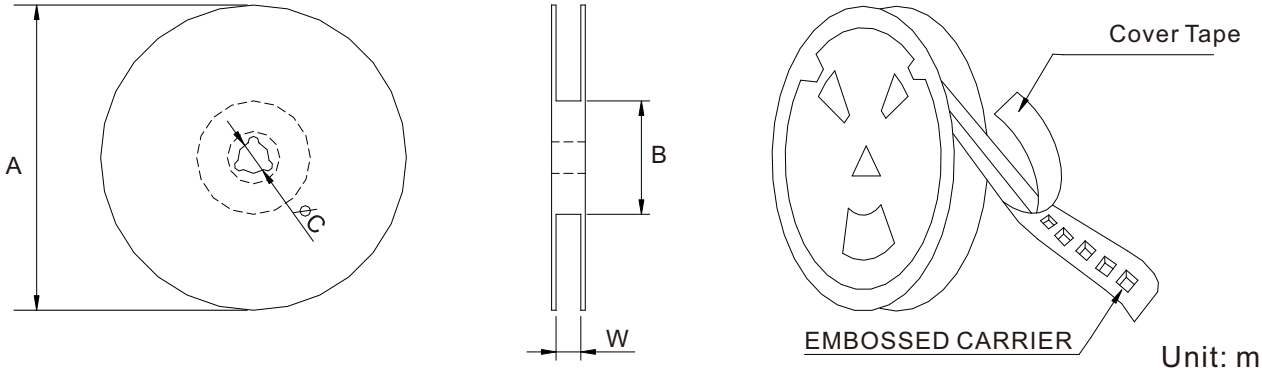

Unit: mm

Type	Dimension	QTY Per Reel	A	B	C	W
	Tolerance	PCS	±2.0	±0.5	±0.5	±0.5
MSRH73P		1500	330	100	13	16.4
MSRH74P		1000	330	100	13	16.4
MSRH124P		800	330	100	13	24.4
MSRH125P		500	330	100	13	24.4
MSRH127P		500	330	100	13	24.4
MSRH129P		400	330	100	13	24.4