Shielded Coupled Inductors MSRH125DP Series

Meisongbei

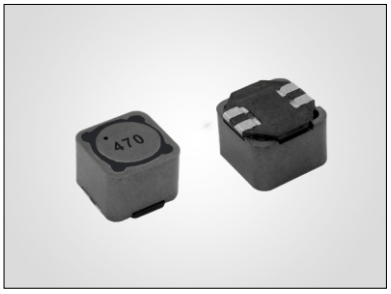

Features

- Used in a variety of circuits including flyback, multi-output buck and SEPIC.
- Can also be used as two single inductors connected in series or parallel, as a Common mode choke or as a 1:1 transformer.
- Provide high inductance, excellent current handing in a rugged, low cost part.

General Specifications

- Storage temp range: -40°C to +125°C
- Operating temp range: -40°C to +125°C

RoHS COMPLIANT | REACH COMPLIANT | Halogen Free

Shape and Dimensions (Unit:mm)

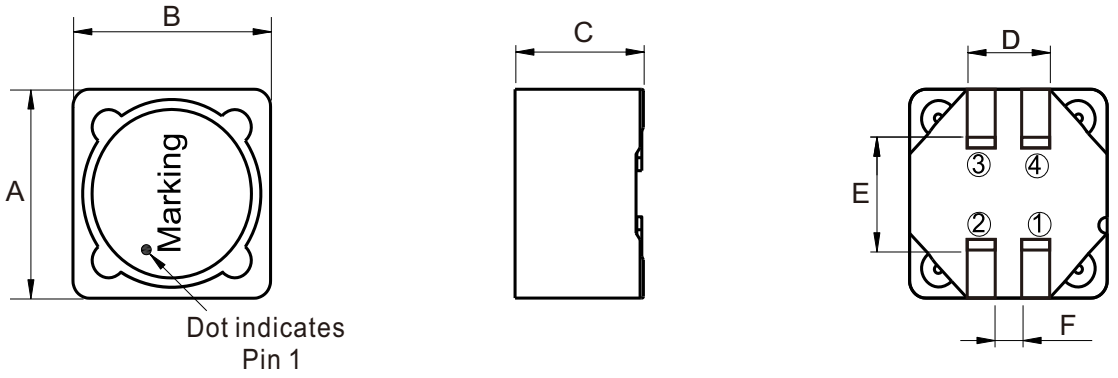

Type	A	B	C	D	E	F
MSRH125DP	12.2 ± 0.3	12.2 ± 0.3	6.0 ± 0.3	5.0 ± 0.3	7.2 Ref	1.7 ± 0.2

Recommended Layout

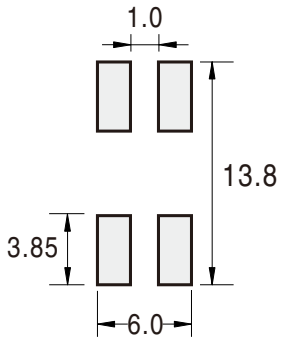

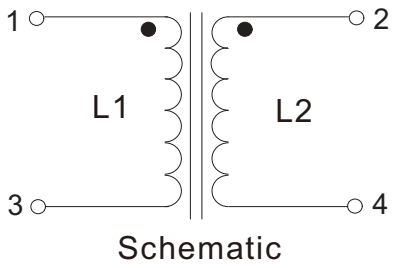

Schematic

Shielded Coupled Inductors MSRH125DP Series

Meisongbei

Electrical Characteristics For MS125DP Series

Part Number	Inductance [uH]	DCR(max) [Ω]	Isat (max) [A]	Irms [A]	
				Both Windings	One Winding
MSRH125DP-4R7M	4.7 ±20%	0.036	10.3	3.16	4.47
MSRH125DP-5R6M	5.6 ±20%	0.040	9.66	3.00	4.24
MSRH125DP-6R8M	6.8 ±20%	0.048	9.21	2.75	3.88
MSRH125DP-8R2M	8.2 ±20%	0.052	8.55	2.63	3.72
MSRH125DP-100M	10 ±20%	0.060	7.40	2.45	3.46
MSRH125DP-120M	12 ±20%	0.074	6.86	2.21	3.12
MSRH125DP-150M	15 ±20%	0.085	6.09	2.06	2.92
MSRH125DP-180M	18 ±20%	0.097	5.30	1.93	2.73
MSRH125DP-220M	22 ±20%	0.116	5.01	1.76	2.49
MSRH125DP-270M	27 ±20%	0.124	4.66	1.70	2.41
MSRH125DP-330M	33 ±20%	0.134	4.22	1.64	2.32
MSRH125DP-390M	39 ±20%	0.142	3.80	1.59	2.25
MSRH125DP-470M	47 ±20%	0.174	3.25	1.44	2.03
MSRH125DP-560M	56 ±20%	0.198	3.07	1.35	1.91
MSRH125DP-680M	68 ±20%	0.216	2.83	1.29	1.83
MSRH125DP-820M	82 ±20%	0.274	2.55	1.15	1.62
MSRH125DP-101M	100 ±20%	0.322	2.20	1.06	1.50
MSRH125DP-121M	120 ±20%	0.418	2.05	0.93	1.31
MSRH125DP-151M	150 ±20%	0.476	1.82	0.87	1.23
MSRH125DP-181M	180 ±20%	0.536	1.60	0.82	1.16
MSRH125DP-221M	220 ±20%	0.691	1.51	0.72	1.02
MSRH125DP-271M	270 ±20%	0.806	1.41	0.67	0.95
MSRH125DP-331M	330 ±20%	1.09	1.28	0.57	0.81
MSRH125DP-391M	390 ±20%	1.20	1.16	0.55	0.77
MSRH125DP-471M	470 ±20%	1.59	1.00	0.48	0.67
MSRH125DP-561M	560 ±20%	1.81	0.95	0.45	0.63
MSRH125DP-681M	680 ±20%	2.06	0.88	0.42	0.59
MSRH125DP-821M	820 ±20%	2.65	0.79	0.37	0.52
MSRH125DP-102M	1000 ±20%	3.06	0.69	0.34	0.49

- Inductance tested at 1kHz, 0.25V, when leads are connected in parallel, inductance is the same value. When leads are connected in series, inductance is four times the value
- DCR is for each winding, when leads are connected in parallel, DCR is half the value. When leads are connected in series, DCR is twice the value
- Saturation Current (Isat): DC current at which the inductance drops 30% from its value without current
- Irms(Both windings): Equal current when applied to each winding simultaneously that cause 40°C temp rise from 25°C ambient.
- Irms(one winding): Maximum current when applied to one winding that cause 40°C temp rise from 25°C ambient.
- Winding to winding isolation: 200Vrms/60S

Tape & Reel Specifications:

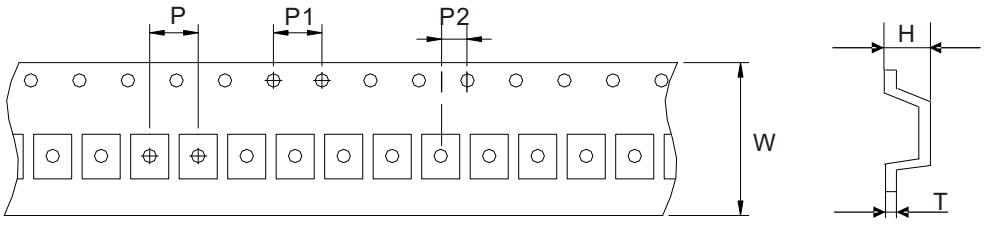

Unit: mm

Type	Dimension	W	P	P1	P2	H	T
	Tolerance	±0.3	±0.1	±0.1	±0.1	±0.15	±0.05
MSRH125DP		24.0	16.0	4.0	2.0	6.20	0.35

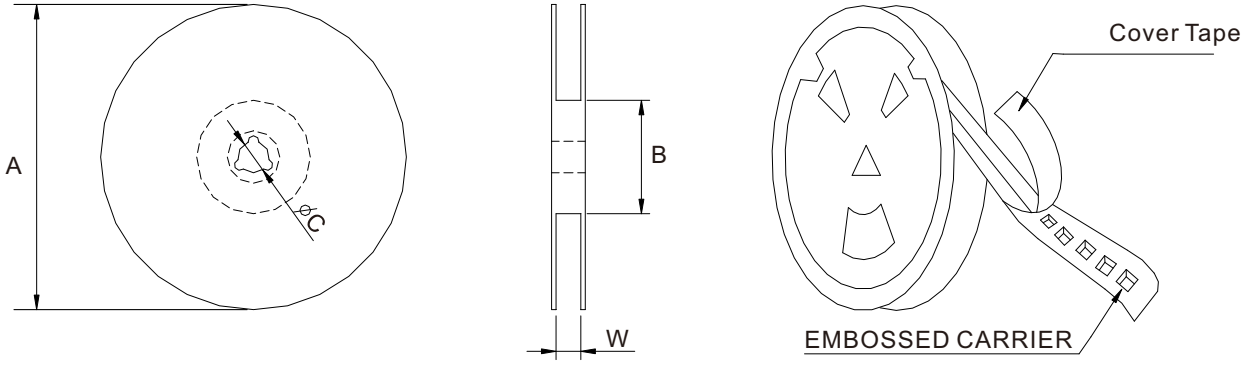

Unit: mm

Type	Dimension	QTY Per Reel	A	B	C	W
	Tolerance	PCS	±2.0	±0.5	±0.5	±0.5
MSRH125DP		500	330	97	13	24.8