Shielded Coupled Inductors MSRH127DP Series

Meisongbei

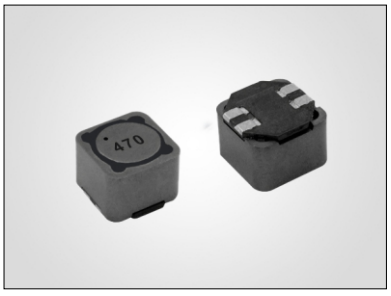

Features

- Used in a variety of circuits including flyback, multi-output buck and SEPIC.
- Can also be used as two single inductors connected in series or parallel, as a Common mode choke or as a 1:1 transformer.
- Provide high inductance, excellent current handing in a rugged, low cost part.

General Specifications

- Storage temp range: -40°C to +125°C
- Operating temp range: -40°C to +125°C

RoHS COMPLIANT | REACH COMPLIANT | Halogen Free

Shape and Dimensions (Unit:mm)

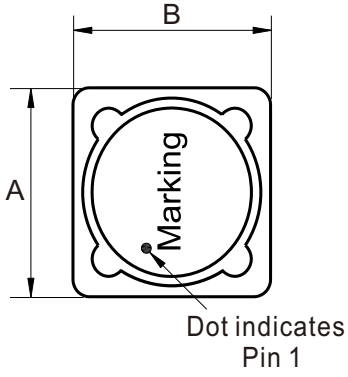

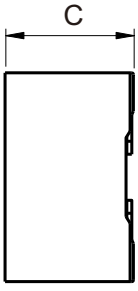

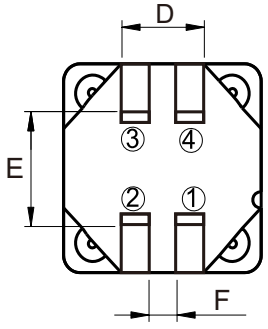

Type	A	B	C	D	E	F
MSRH127DP	12.2 ± 0.3	12.2 ± 0.3	7.8 ± 0.3	5.0 ± 0.3	7.2 Ref	1.7 ± 0.2

Recommended Layout

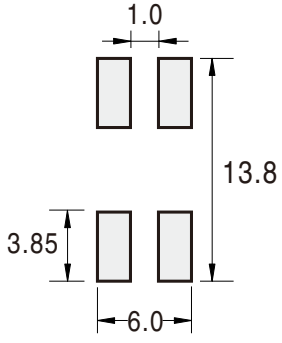

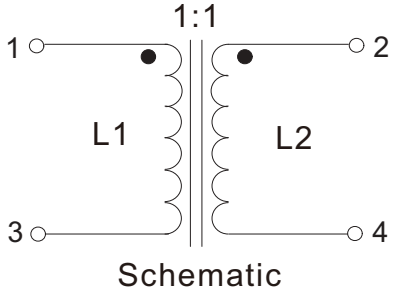

Schematic

Shielded Coupled Inductors MSRH127DP Series

Meisongbei

Electrical Characteristics For MS127DP Series

Part Number	Inductance [uH]	DCR(max) [Ω]	Isat (max) [A]	Irms [A]	
				Both Windings	One Winding
MSRH127DP-4R7M	4.7 ±20%	0.038	14.9	3.16	4.47
MSRH127DP-5R6M	5.6 ±20%	0.046	13.4	2.87	4.06
MSRH127DP-6R8M	6.8 ±20%	0.048	13.1	2.81	3.98
MSRH127DP-8R2M	8.2 ±20%	0.050	10.8	2.76	3.90
MSRH127DP-100M	10 ±20%	0.058	10.5	2.56	3.62
MSRH127DP-120M	12 ±20%	0.062	9.6	2.48	3.50
MSRH127DP-150M	15 ±20%	0.072	9.1	2.30	3.25
MSRH127DP-180M	18 ±20%	0.080	8.0	2.18	3.08
MSRH127DP-220M	22 ±20%	0.096	6.8	1.99	2.81
MSRH127DP-270M	27 ±20%	0.120	6.5	1.78	2.52
MSRH127DP-330M	33 ±20%	0.150	5.6	1.59	2.25
MSRH127DP-390M	39 ±20%	0.160	5.5	1.54	2.18
MSRH127DP-470M	47 ±20%	0.180	5.2	1.45	2.05
MSRH127DP-560M	56 ±20%	0.190	4.5	1.41	2.00
MSRH127DP-680M	68 ±20%	0.210	4.1	1.35	1.90
MSRH127DP-820M	82 ±20%	0.280	3.8	1.16	1.65
MSRH127DP-101M	100 ±20%	0.300	3.4	1.13	1.59
MSRH127DP-121M	120 ±20%	0.410	3.2	0.96	1.36
MSRH127DP-151M	150 ±20%	0.460	2.8	0.91	1.29
MSRH127DP-181M	180 ±20%	0.510	2.5	0.86	1.22
MSRH127DP-221M	220 ±20%	0.690	2.3	0.74	1.05
MSRH127DP-271M	270 ±20%	0.900	2.1	0.65	0.92
MSRH127DP-331M	330 ±20%	1.02	1.9	0.61	0.86
MSRH127DP-391M	390 ±20%	1.12	1.7	0.58	0.82
MSRH127DP-471M	470 ±20%	1.43	1.6	0.50	0.70
MSRH127DP-561M	560 ±20%	1.69	1.5	0.47	0.67
MSRH127DP-681M	680 ±20%	2.29	1.3	0.41	0.58
MSRH127DP-821M	820 ±20%	2.55	1.2	0.39	0.55
MSRH127DP-102M	1000 ±20%	2.83	1.1	0.37	0.52

- Inductance tested at 1kHz, 0.25V, when leads are connected in parallel, inductance is the same value. When leads are connected in series, inductance is four times the value
- DCR is for each winding, when leads are connected in parallel, DCR is half the value. When leads are connected in series, DCR is twice the value
- Saturation Current (Isat): DC current at which the inductance drops 30% from its value without current
- Irms(Both windings): Equal current when applied to each winding simultaneously that cause 40°C temp rise from 25°C ambient.
- Irms(one winding): Maximum current when applied to one winding that cause 40°C temp rise from 25°C ambient.
- Winding to winding isolation: 200Vrms/60S

Tape & Reel Specifications:

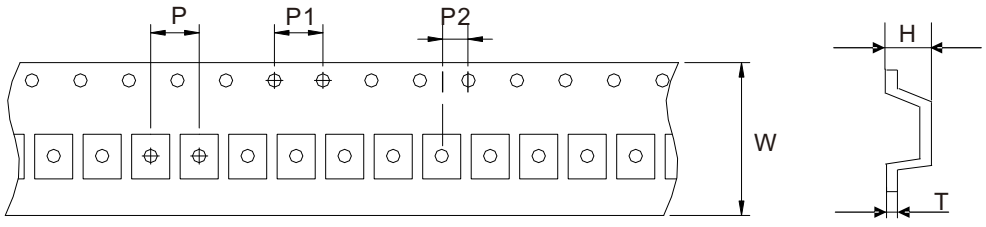

Unit: mm

Type	Dimension	W	P	P1	P2	H	T
	Tolerance	±0.3	±0.1	±0.1	±0.1	±0.15	±0.05
MSRH127DP		24.0	16.0	4.0	2.0	8.20	0.40

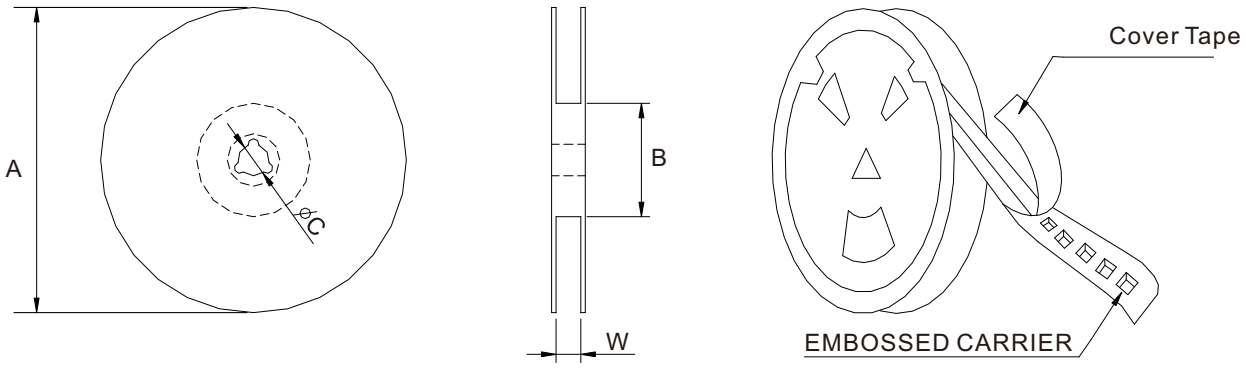

Unit: mm

Type	Dimension	QTY Per Reel	A	B	C	W
	Tolerance	PCS	±2.0	±0.5	±0.5	±0.5
MSRH127DP		500	330	97	13	24.8