Shielded Coupled Inductors MSRH74DP Series

Meisongbei

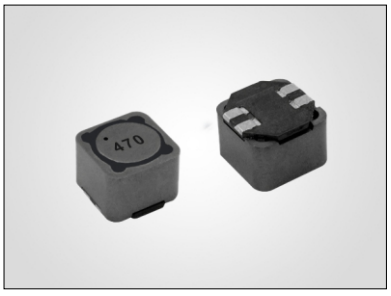

Features

- Used in a variety of circuits including flyback, multi-output buck and SEPIC.
- Can also be used as two single inductors connected in series or parallel, as a Common mode choke or as a 1:1 transformer.
- Provide high inductance, excellent current handing in a rugged, low cost part.

General Specifications

- Storage temp range: -40°C to +125°C
- Operating temp range: -40°C to +125°C

RoHS COMPLIANT | REACH COMPLIANT | Halogen Free

Shape and Dimensions (Unit:mm)

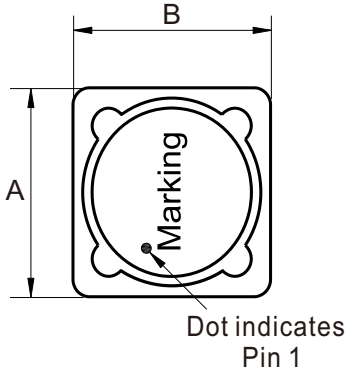

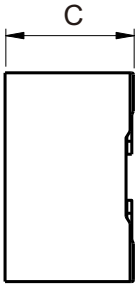

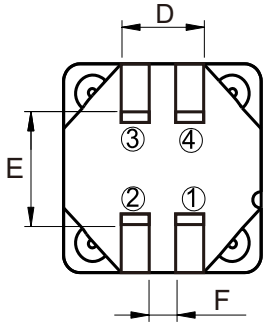

Type	A	B	C	D	E	F
MSRH74DP	7.3 ± 0.3	7.3 ± 0.3	4.6 max	2.9 ± 0.3	2.7 ± 0.3	1.0 ± 0.2

Recommended Layout

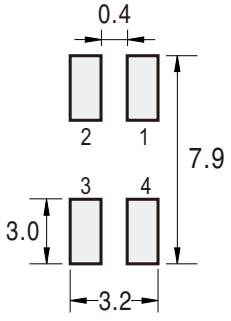

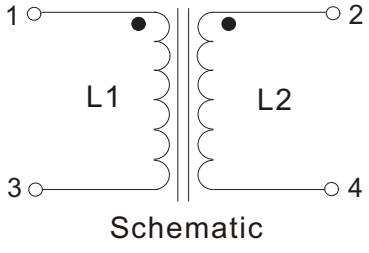

Schematic

Shielded Coupled Inductors MSRH74DP Series

Meisongbei

Electrical Characteristics For MS74DP Series

Part Number	Inductance [uH]	DCR(max) [Ω]	Isat (max) [A]	Irms [A]	
				Both Windings	One Winding
MSRH74DP-3R3M	3.3 ±20%	0.040	5.4	2.05	2.89
MSRH74DP-4R7M	4.7 ±20%	0.051	4.6	1.74	2.46
MSRH74DP-5R6M	5.6 ±20%	0.063	4.2	1.57	2.22
MSRH74DP-6R8M	6.8 ±20%	0.070	3.9	1.49	2.10
MSRH74DP-8R2M	8.2 ±20%	0.075	3.5	1.44	2.03
MSRH74DP-100M	10 ±20%	0.100	3.0	1.24	1.76
MSRH74DP-120M	12 ±20%	0.120	2.7	1.14	1.61
MSRH74DP-150M	15 ±20%	0.130	2.4	1.09	1.54
MSRH74DP-180M	18 ±20%	0.170	2.3	0.95	1.35
MSRH74DP-220M	22 ±20%	0.220	2.1	0.84	1.19
MSRH74DP-270M	27 ±20%	0.250	1.9	0.79	1.11
MSRH74DP-330M	33 ±20%	0.270	1.7	0.76	1.07
MSRH74DP-390M	39 ±20%	0.380	1.5	0.64	0.90
MSRH74DP-470M	47 ±20%	0.420	1.4	0.61	0.86
MSRH74DP-560M	56 ±20%	0.460	1.3	0.58	0.82
MSRH74DP-680M	68 ±20%	0.600	1.2	0.51	0.72
MSRH74DP-820M	82 ±20%	0.680	1.1	0.48	0.67
MSRH74DP-101M	100 ±20%	0.770	0.98	0.45	0.63
MSRH74DP-121M	120 ±20%	1.03	0.90	0.39	0.55
MSRH74DP-151M	150 ±20%	1.35	0.80	0.34	0.48
MSRH74DP-181M	180 ±20%	1.52	0.73	0.32	0.45
MSRH74DP-221M	220 ±20%	1.72	0.66	0.30	0.42
MSRH74DP-271M	270 ±20%	2.41	0.60	0.25	0.36
MSRH74DP-331M	330 ±20%	2.70	0.54	0.24	0.34
MSRH74DP-391M	390 ±20%	3.05	0.50	0.23	0.32
MSRH74DP-471M	470 ±20%	4.00	0.46	0.20	0.28
MSRH74DP-561M	560 ±20%	4.43	0.42	0.19	0.26
MSRH74DP-681M	680 ±20%	5.00	0.38	0.18	0.25
MSRH74DP-821M	820 ±20%	6.80	0.35	0.15	0.21
MSRH74DP-102M	1000 ±20%	7.80	0.31	0.14	0.20

- Inductance tested at 1kHz, 0.25V, when leads are connected in parallel, inductance is the same value.
  When leads are connected in series, inductance is four times the value
- DCR is for each winding, when leads are connected in parallel, DCR is half the value. When leads are connected in series, DCR is twice the value
- Saturation Current (Isat): DC current at which the inductance drops 30% from its value without current
- Irms(Both windings): Equal current when applied to each winding simultaneously that cause 40°C temp rise from 25°C ambient.
- Irms(one winding): Maximum current when applied to one winding that cause 40°C temp rise from 25°C ambient.
- Winding to winding isolation: 200Vrms/60S

Tape & Reel Specifications:

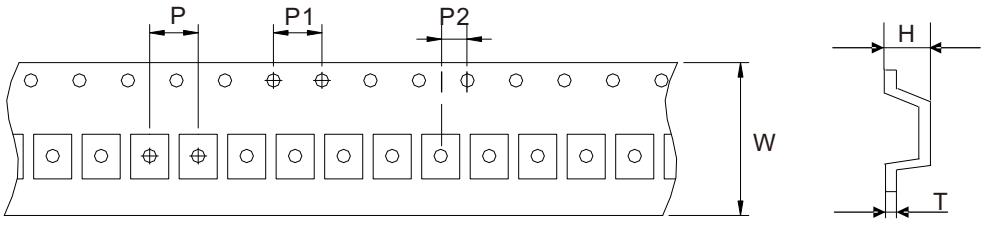

Unit: mm

Type	Dimension	W	P	P1	P2	H	T
	Tolerance	±0.3	±0.1	±0.1	±0.1	±0.15	±0.05
MSRH74DP		16.0	12.0	4.0	2.0	3.80	0.35

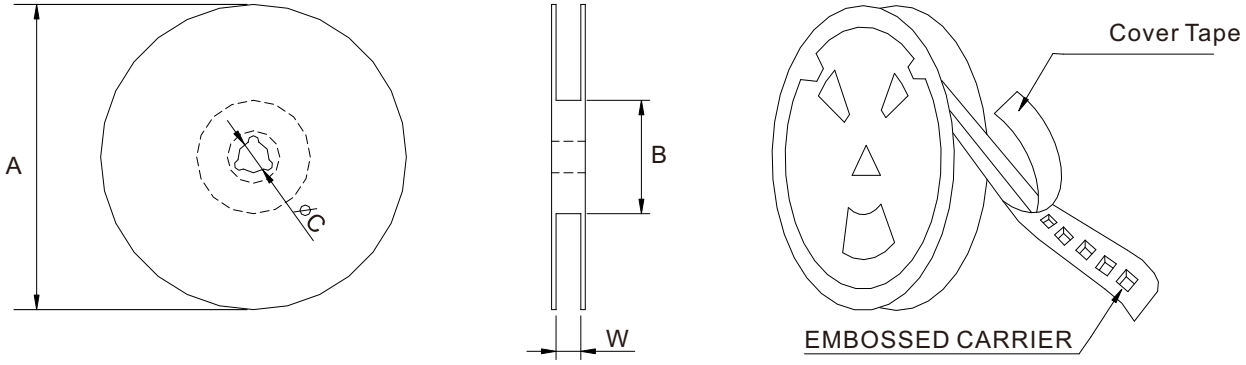

Unit: mm

Type	Dimension	QTY Per Reel	A	B	C	W
	Tolerance	PCS	±2.0	±0.5	±0.5	±0.5
MSRH74DP		1000	330	97	13	16.4