SMD Common Mode Chokes - MSTM50 Series

Meisongbei

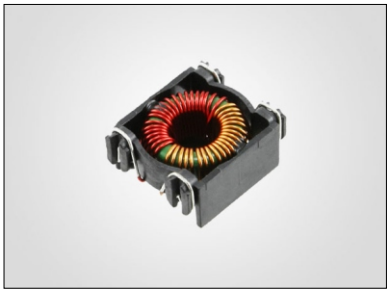

Features

- Toroid core
- SMD Construction
- High Reliability

Applications

- Common mode choke for power application
- Filter and Noise Suppression
- DC/DC, AC/DC converter

General Specifications

- Storage temp range: -40°C to +125°C
- Operating temp range: -40°C to +125°C

Package Quantity

- 250 pcs/reel

RoHS COMPLIANT | REACH COMPLIANT | Halogen Free

Dimensions & Configurations (Unit:mm)

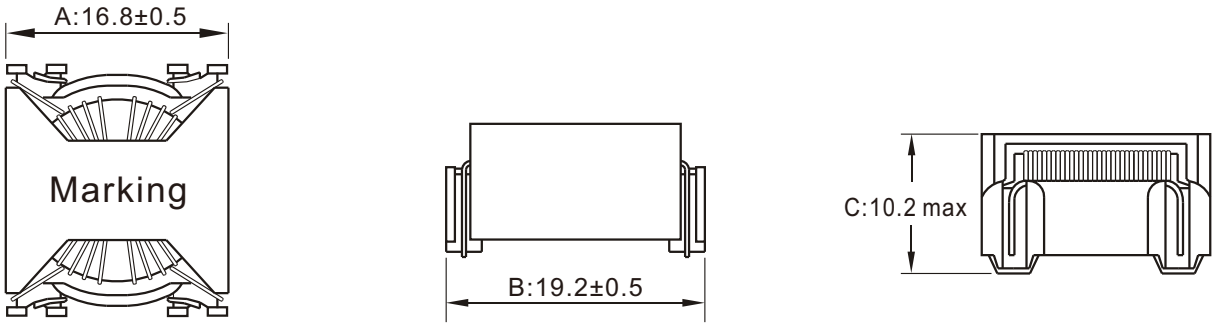

Recommended Layout

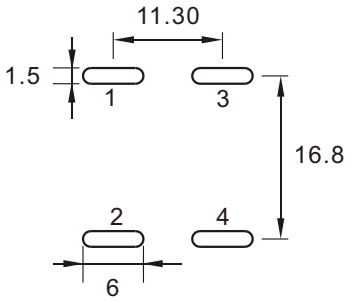

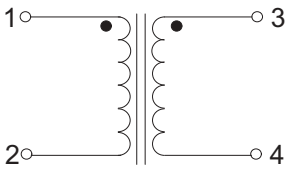

Schematic 1:1

Electrical Characteristics For MSTM50 Series @ 25°C

Part Number	Inductance [mH]	DCR(max) [mΩ]	Rated Current (max) [A]
MSTM50-02	0.59 ±35%	21	5.6
MSTM50-03	1.32 ±35%	60	3.3
MSTM50-04	1.47 ±35%	80	2.8
MSTM50-05	0.77 ±35%	40	4.7
MSTM50-06	0.22 ±35%	60	3.3

SMT Common Mode Chokes - MSTM80 Series

Meisongbei



Features

- Toroid core
- SMD Construction
- High Reliability

Applications

- Common mode choke for power application
- Filter and Noise Suppression
- DC/DC, AC/DC converter

General Specifications

- Storage temp range: -40°C to +125°C
- Operating temp range: -40°C to +125°C

Package Quantity

- 150 pcs/reel

RoHS COMPLIANT | REACH COMPLIANT | Halogen Free

Dimensions & Configurations (Unit:mm)

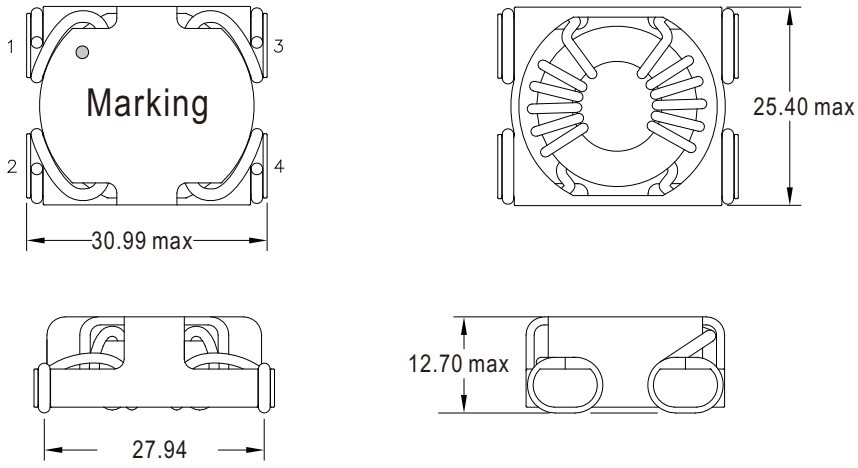

Recommended Layout

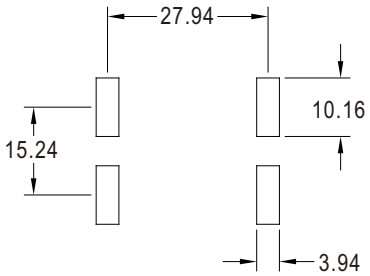

Schematic

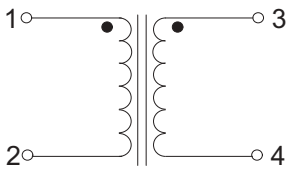

Turns Ratio: 1:1

Electrical Characteristics @ 25°C

Part Number	Inductance [uH]	DCR(max) [mΩ]	Rated Current [A]
MSTM80-811N	810 ±35%	14	9.7
MSTM80-631N	630 ±35%	10	11.6
MSTM80-471N	470 ±35%	8	14.0

- Inductance is per winding tested at 1kHz,0.25V
- Hi-pot:AC1000V/1mA/3S (N1-N2)
- Rated Current: The current at which the temperature rise is 55°C