Rod Core Choke - RC0520 Series

Meisongbei

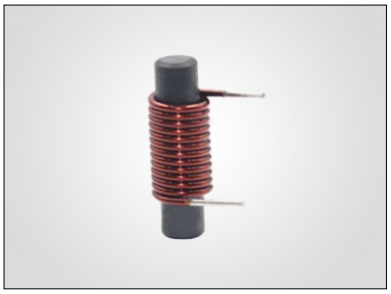

Features

- High mechanical stability
- High saturation currents
- Custom design on request

Applications

- Motors
- Switching regulators
- Power supplies, Broadband filtering

General Specifications

- Storage temp range: -40°C to +125°C
- Operating temp range: -40°C to +125°C
- Moisture Sensitivity Level(MSL): 1

RoHS COMPLIANT | REACH COMPLIANT | Halogen Free

Shape and Dimensions (Unit:mm)

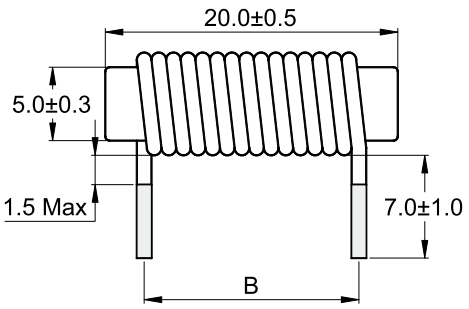

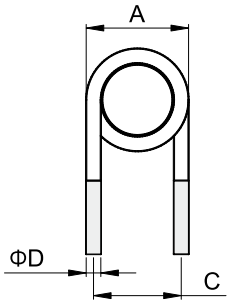

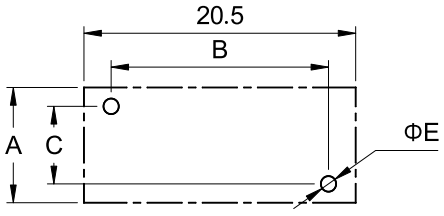

Reference hole pattern

Part Number	A (max)	B (±1.0)	C (±0.5)	D (±0.15)	E (Ref)
RC0520-2R2M	8.50	14.5	6.45	1.40	1.90
RC0520-3R3M	8.00	16.5	6.25	1.20	1.60
RC0520-4R7M	7.50	14.5	5.95	0.90	1.30
RC0520-5R6M	7.50	17.0	5.95	0.90	1.30
RC0520-6R8M	7.20	16.0	5.85	0.80	1.20
RC0520-100M	6.90	18.0	5.75	0.70	1.10
RC0520-150M	6.80	15.0	5.55	0.50	0.90

Electrical Characteristics For RC0520 Series

Part Number	Inductance [uH]	DCR (max) [mΩ]	Isat (max) [A]	Irms (max) [A]
RC0520-2R2M	2.2 ±20%	3.13	15.0	19.5
RC0520-3R3M	3.3 ±20%	5.48	11.0	14.8
RC0520-4R7M	4.7 ±20%	10.60	10.5	10.6
RC0520-5R6M	5.6 ±20%	11.90	9.50	10.0
RC0520-6R8M	6.8 ±20%	15.5	9.00	8.8
RC0520-100M	10 ±20%	27.4	7.00	6.6
RC0520-150M	15 ±20%	53.9	5.80	4.7

- Inductance test at 1kHz, 0.25V
- Saturation Current (Isat): The DC current at which the inductance decrease 20% of its initial value without current.
- Temperature rise current (Irms): The DC current when the temperature rise is △t＝40°C (Ta=25°C)