Rod Core Choke - RC0830 Series

Meisongbei

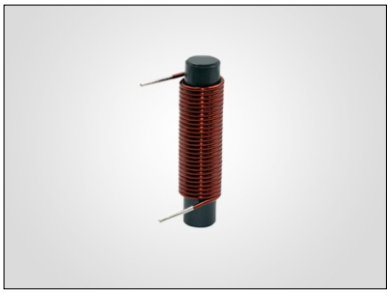

Features

- High mechanical stability
- High saturation currents
- Custom design on request

Applications

- Motors
- Switching regulators
- Power supplies, Broadband filtering

General Specifications

- Storage temp range: -40°C to +125°C
- Operating temp range: -40°C to +125°C
- Moisture Sensitivity Level(MSL): 1

RoHS COMPLIANT | REACH COMPLIANT | Halogen Free

Shape and Dimensions (Unit:mm)

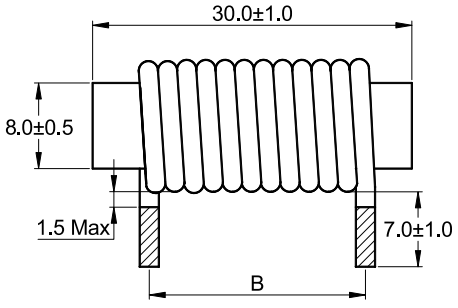

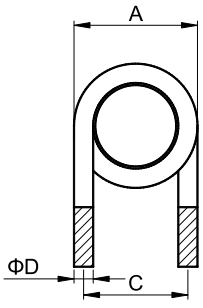

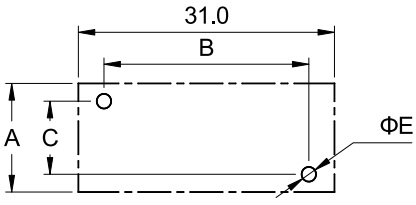

Reference hole pattern

Part Number	A (max)	B (±1.0)	C (±0.5)	D (±0.15)	E (Ref)
RC0830-4R7M	12.2	22.5	9.85	1.80	2.20
RC0830-5R6M	11.8	22.0	9.65	1.60	2.00
RC0830-6R8M	11.6	21.0	9.45	1.40	1.80
RC0830-8R2M	11.2	21.0	9.35	1.30	1.70
RC0830-100M	10.9	22.0	9.25	1.20	1.60
RC0830-150M	10.6	23.0	9.05	1.00	1.40
RC0830-220M	10.2	22.5	8.85	0.80	1.20

Electrical Characteristics For RC0830 Series

Part Number	Inductance [uH]	DCR (max) [mΩ]	Isat (max) [A]	Irms (max) [A]
RC0830-4R7M	4.7 ±20%	3.54	21.0	27.7
RC0830-5R6M	5.6 ±20%	4.66	19.0	24.1
RC0830-6R8M	6.8 ±20%	6.47	16.0	20.4
RC0830-8R2M	8.2 ±20%	8.10	14.0	18.3
RC0830-100M	10 ±20%	10.6	12.0	16.0
RC0830-150M	15 ±20%	18.4	10.0	12.1
RC0830-220M	22 ±20%	32.8	9.00	9.10

- Inductance test at 1kHz, 0.25V
- Saturation Current (Isat): The DC current at which the inductance decrease 20% of its initial value without current.
- Temperature rise current (Irms): The DC current when the temperature rise is △t＝40°C (Ta=25°C)