SMD Common Mode Line Filter - SCH985 Series

Meisongbei



Features

- Dual-choke configuration.
- Small compact design
- Multiple housing options
- Custom-specifie versions available on request.
- Isolation voltage: 500V, 50Hz
- Temperature range: -40°C to +125°C

Applications

- Phase-angle control circuits in combination with saturating chokes
- EMI input filters
- Suppressing high interference levels

RoHS COMPLIANT | REACH COMPLIANT | Halogen Free

Dimensions & Configurations (Unit:mm)

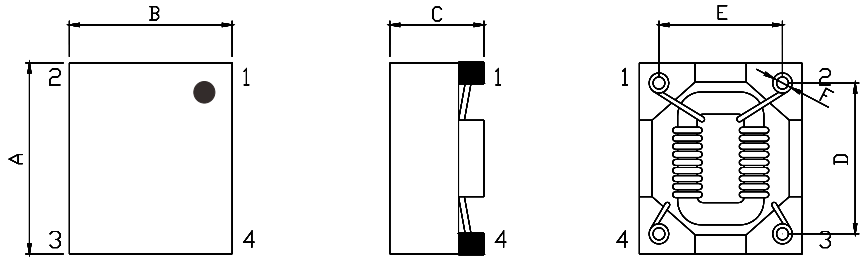

Type	A	B	C	D	E	F
SCH985	9.5±0.3	8.3±0.5	5.3 Max	7.5±0.5	6.3±0.5	1.2 Ref

Land Patterns(mm)

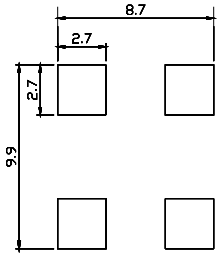

Schematic

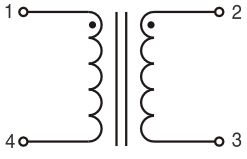

Electrical Characteristics For SCH985 Series

Part Number	Impedance[Ω] @100MHz	Inductance(Ref) [uH]	DCR (max) [mΩ]	IDC (max) [A]
SCH985-501	500±25%	5	14	5.0
SCH985-801	800±25%	9	20	3.5
SCH985-102	1000±25%	11	30	2.5
SCH985-222	2200±25%	30	60	1.4

- Inductance Testing:100KHz 0.1V HP4284A
- IDC Max: rating AC/DC current A@ 40°C max.
- DCR: @ 20°C

Tape & Reel Specifications:

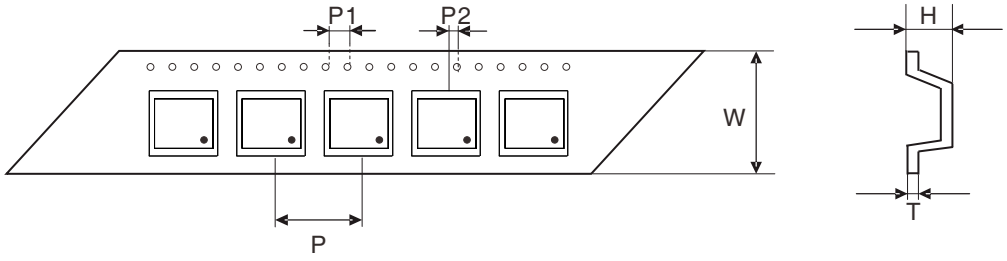

Unit: mm

Type	Dimension	W	P	P1	P2	H	T
	Tolerance	±0.3	±0.1	±0.1	±0.1	±0.15	±0.05
SCH985		16.0	12.0	4.00	2.00	5.50	0.35

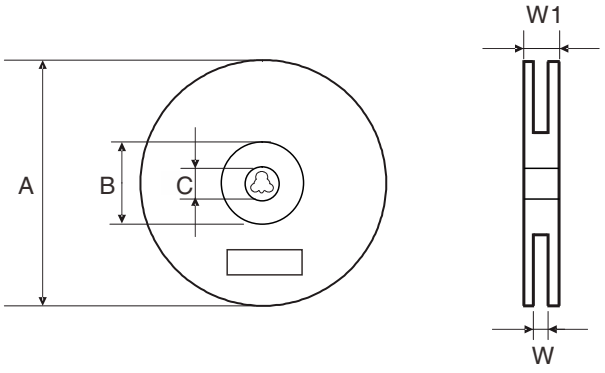

Unit: mm

Type	Dimension	QTY Per Reel	A	B	C	W	W1
	Tolerance	Pcs	±2.0	min	±0.5	±0.5	±3.0
SCH985		1000	330	100	13.5	16.5	21.0