AC COMMON MODE COIL - UU16 Series

Meisongbei

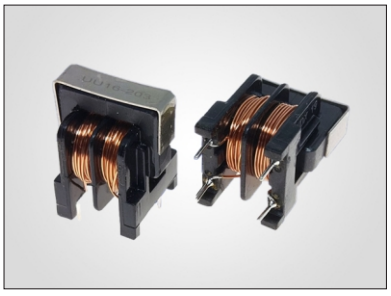

Features

- Low cost, high performance
- Custom designs are available
- Flammability corresponding to UL94V-0

Applications

- Mains filter, Lighting
- Compact switched-mode power supplies
- Electronic ballast applications (LED bulb)

General Specifications

- Storage temp range: -40°C to +125°C
- Operating temp range: -40°C to +125°C

RoHS COMPLIANT | REACH COMPLIANT | Halogen Free

Shape and Dimensions (Unit:mm)

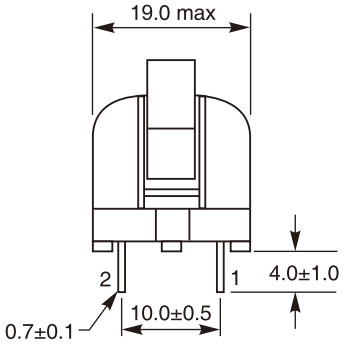

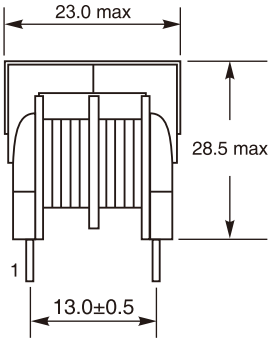

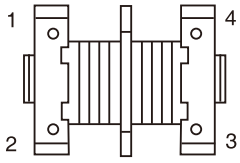

VARNISH

Suggested PCB Layout

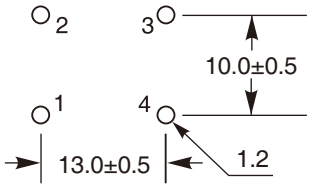

Schematic

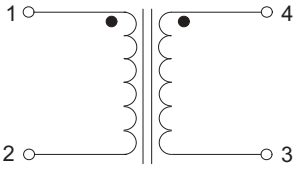

Turns Ratio: 1:1

Electrical Specifications @ 25°C

Part Number	Inductance [mH] 1-2/4-3 (min)	DCR [Ω] (max)	Rated Current [A]	Rated Voltage [Vac]	Insulation Resistance [MΩ] (min)
UU16-152	1.5	0.20	1.50	300	100
UU16-302	3.0	0.30	1.20	300	100
UU16-402	4.0	0.40	1.10	300	100
UU16-602	6	0.50	1.00	300	100
UU16-802	8	0.80	0.80	300	100
UU16-103	10	1.20	0.60	300	100
UU16-203	20	1.60	0.50	300	100
UU16-303	30	2.80	0.40	300	100

- Inductance tested at 1kHz
- Hi-pot:AC1500V/5mA/2S (N1-N2)
- Rated Current: The DC current at which the temperature rise is 40°C