AC COMMON MODE COIL - UU9.8 Series

Meisongbei

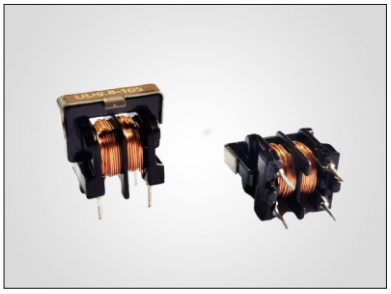

Features

- Low cost, high performance
- Ideal for signal line applications
- Flammability corresponding to UL94V-0

Applications

- Mains filter, Lighting
- Compact switched-mode power supplies
- Electronic ballast applications (LED bulb)

General Specifications

- Storage temp range: -40°C to +125°C
- Operating temp range: -40°C to +125°C

RoHS COMPLIANT | REACH COMPLIANT | Halogen Free

Shape and Dimensions (Unit:mm)

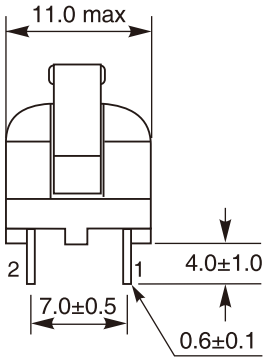

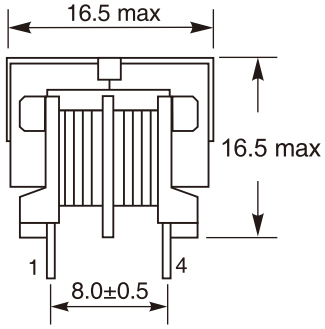

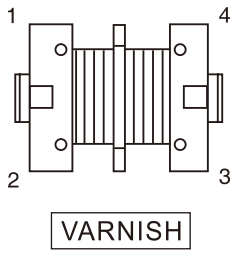

Suggested PCB Layout

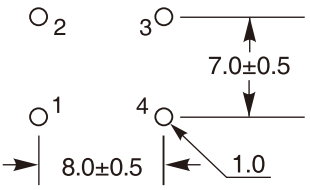

Schematic

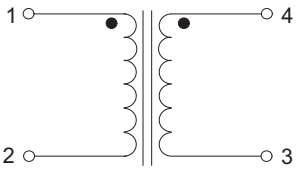

Turns Ratio: 1:1

Electrical Specifications @ 25°C

Part Number	Inductance [mH] 1-2/4-3 (min)	DCR [Ω] (max)	Rated Current [A]	Rated Voltage [Vac]	Insulation Resistance [MΩ] (min)
UU9.8-471	0.47	0.15	1.00	300	100
UU9.8-681	0.68	0.25	0.85	300	100
UU9.8-102	1.0	0.35	0.70	300	100
UU9.8-222	2.2	0.7	0.50	300	100
UU9.8-392	3.9	1.2	0.38	300	100
UU9.8-472	4.7	1.6	0.34	300	100
UU9.8-682	6.8	2.5	0.25	300	100
UU9.8-103	10.0	4.0	0.20	300	100

- Inductance tested at 1kHz
- Hi-pot:AC1500V/5mA/2S (N1-N2)
- Rated Current: The DC current at which the temperature rise is 40°C